7.0” ~ 23.8” Fanless Industrial Panel PC With Intel® Celeron® J6412 Processor

- UL Listed
- Microsoft Windows® 10, 11, Linux® OS Options
- Projected Capacitive and Resistive Touch
- Rugged IP66 Rated Aluminum Enclosure
- Wake on LAN Supported (WOL)

System	CPU	Intel® Celeron™ ElkHart Lake™ J6412 Quad-Core 2.0 GHz Processor			
	System Chipset	SoC			
	System Memory Options	1x DDR4 260-pin SO-DIMM RAM (8, 16, 32 GB)			
	TPM Chip	Yes (TPM 2.0 onboard)			
I/O Ports	USB	2 x USB 3.2 type A		2 x USB 2.0 type A 2 x USB 3.2 type A	
	Serial	1 x DE9P RS-232/422/485, COM1 (default RS-232)		1 x DE9P RS-232/422/485, COM1 (default RS-232) 1 x DE9P RS-232, COM2	
	Audio	1 x 3.5 mm line out			
	LAN	1 x GbE RJ-45 1 x 2.5 GbE RJ-45			
	Wireless LAN	2 x Wireless LAN Antenna ports (covered unless optional Wi-Fi Expansion kit purchased)			
	Power	3-pin Terminal Block type, DC power input			
	Remote Power Switch	N/A			
	External Display	1 x DisplayPort 1.4 (max 4096 x 2160 pixels @ 60Hz)			
Expansion	Expansion Slot	Optional Wi-Fi kit (IEEE802.11ax card and 2 x antenna, Bluetooth 5.2 Support)			
Touch Screen	Type	Projected Capacitive Touch (Multi-Touch Supported)			
	Interface	USB			
	Light Transmission	90+%			
Display	Display Type	7.0” WVGA TFT LCD	8.0” SVGA TFT LCD	10.1” WXGA TFT LCD	12.1” XGA TFT LCD
	Max. Resolution	800 x 480	800 x 600	1280 x 800	1024 x 768
	Max. Color	262K	262K	16.7M	16.2M
	Luminance (cd/m²)	350	450	350	500
	View Angle (H°/V°)	160/160	140/130	170/170	178/178
	Contrast Ratio	1000:1	500:1	800:1	1000:1
	Backlight Lifetime (hours)	40,000+	40,000+	30,000+	30,000+
Storage	Solid State Drive Type	1 x M.2 2280 3D TLC SATA3			
	Solid State Drive Capacity Options	128, 256, 512 GB, 1 TB, 2 TB SSD			
	SD Card Slot	N/A			
Electrical	Input Voltage	9-36 VDC	9-36 VDC	9-36 VDC	9-36 VDC
	Input Current	0.92-3.68 A	0.87-3.48 A	1.23-4.92 A	1.43-5.72 A
	Input Power (max.)	33.12 W	31.32 W	44.28 W	51.48 W
Mechanical	Dimensions (W x H x D)	7.95 x 5.87 x 2.28” [202 x 149 x 58 mm]	9.09 x 6.93 x 2.72” [231 x 176 x 69 mm]	11.22 x 7.44 x 2.95” [285 x 189 x 75 mm]	12.56 x 9.65 x 3.03” [319 x 245 x 77 mm]
	Net Weight	~ 2.98 lbs [1.35 kg]	~ 4.85 lbs [2.2 kg]	~ 5.95 lbs [2.7 kg]	~ 7.28 lbs [3.3 kg]
	Panel Cutout Dimensions (W x H)	7.56 x 5.43” [192 x 138 mm]	8.74 x 6.57” [222 x 167 mm]	10.71 x 6.93” [272 x 176 mm]	11.93 x 9.02” [303 x 229 mm]
	Mounting	Panel mounting, VESA 75 x 75 mm		Panel mounting, VESA 100 x 100 mm	
	Construction	Die-cast Aluminum			
Environmental	Operating Temperature	-4~140°F [-20~60°C]			
	Storage Temperature	-22~158°F [-30~70°C]			
	Relative Humidity	10 to 95% @ 40°C, non-condensing			
	Altitude (Air Pressure)	Up to 2,000 Meters (~80 kPa)			
	Shock Resistance	Tested to IEC 60068-2-27 (2008): 15G acceleration peak to peak, XYZ axis, 11ms pulse duration			
	Vibration Resistance	Tested to IEC 60068-2-64 (2019): 5~500Hz, 1.0 G_{rms}, XYZ axis, 30 mins duration			
	Rating	IP66 / NEMA 4 when panel mounted			
	Certification	cULus / CE / FCC Class A / RoHS			
Operating System Options	Microsoft Windows® Options	Microsoft Windows® 10 IoT Enterprise Embedded LTSC 64-bit (EPKEA) Microsoft Windows® 10 IoT Enterprise LTSC 64-bit (PKEA) Microsoft Windows® 11 IoT Enterprise Embedded LTSC 64-bit (EPKEA) Microsoft Windows® 11 IoT Enterprise LTSC 64-bit (PKEA) Microsoft Windows® 11 Professional			
	Linux® Options	Linux® Ubuntu Desktop			
Notes	Specifications subject to change without notice.				

7.0” ~ 23.8” Fanless Industrial Panel PC With Intel® Celeron® J6412 Processor

- UL Listed
- Microsoft Windows® 10, 11, Linux® OS Options
- Projected Capacitive and Resistive Touch
- Rugged IP66 Rated Aluminum Enclosure
- Wake on LAN Supported (WOL)

System	CPU	Intel® Celeron™ ElkHart Lake™ J6412 Quad-Core 2.0 GHz Processor			
	System Chipset	SoC			
	System Memory Options	1x DDR4 260-pin SO-DIMM RAM (8, 16, 32 GB)			
	TPM Chip	Yes (TPM 2.0 onboard)			
I/O Ports	USB	2 x USB 2.0 type A 2 x USB 3.2 type A			
	Serial	1 x DE9P RS-232/422/485, COM1 (default RS-232) 1 x DE9P RS-232, COM2			
	Audio	1 x 3.5 mm line out			
	LAN	1 x GbE RJ-45 1 x 2.5 GbE RJ-45			
	Wireless LAN	2 x Wireless LAN Antenna ports (covered unless optional Wi-Fi Expansion kit purchased)			
	Power	3-pin Terminal Block type, DC power input			
	Remote Power Switch	N/A			
	External Display	1 x DisplayPort 1.4 (max 4096 x 2160 pixels @ 60Hz)			
Expansion	Expansion Slot	Optional Wi-Fi kit (IEEE802.11ax card and 2 x antenna, Bluetooth 5.2 Support)			
Touch Screen	Type	Projected Capacitive (Multi-Touch Supported) or Resistive Touch	Projected Capacitive Touch (Multi-Touch Supported)	Projected Capacitive (Multi-Touch Supported) or Resistive Touch	Projected Capacitive Touch (Multi-Touch Supported)
	Interface	USB			
	Light Transmission	90+%			
Display	Display Type	**15.0” XGA TFT LCD**	**15.6” FHD TFT LCD**	**17” SXGA TFT LCD**	**18.5” FHD TFT LCD**
	Max. Resolution	1024 x 768	1920 x 1080	1280 x 1024	1920 x 1080
	Max. Color	16.7M	16.7M	16.7M	16.7M
	Luminance (cd/m²)	350	500	350	350
	View Angle (H°/V°)	178/178	178/178	160/140	178/178
	Contrast Ratio	1000:1	1000:1	1000:1	1000:1
	Backlight Lifetime (hours)	50,000+	50,000+	50,000+	50,000+
Storage	Solid State Drive Type	1 x M.2 2280 3D TLC SATA3			
	Solid State Drive Capacity Options	128, 256, 512 GB, 1 TB, 2 TB SSD			
	SD Card Slot	N/A			
Electrical	Input Voltage	9-36 VDC	9-36 VDC	9-36 VDC	9-36 VDC
	Input Current	1.47-5.88 A	1.68-6.72 A	1.57-6.28 A	1.95-7.8 A
	Input Power (max).	52.92 W	60.48 W	56.52 W	70.2 W
Mechanical	Dimensions (W x H x D)	16.14 x 12.20 x 3.10” [410 x 310 x 78.7 mm]	16.22 x 10.93 x 3.07” [412 x 277.5 x 78 mm]	17.28 x 13.70 x 3.23” [439 x 348 x 82 mm]	19.67 x 12.39 x 3.23” [499.6 x 314.6 x 82 mm]
	Net Weight	~ 11.02 lbs [5 kg]	~ 9.26 lbs [4.2 kg]	~ 13.22 lbs [6 kg]	~ 15.21 lbs [6.9 kg]
	Panel Cutout Dimensions (W x H)	15.43 x 11.50” [392 x 292 mm]	15.51 x 10.24” [394 x 260 mm]	16.61 x 13.03” [422 x 331 mm]	18.98 x 11.69” [482 x 297 mm]
	Mounting	Panel mounting, VESA 100 x 100 mm			
	Construction	Die-cast Aluminum			
Environmental	Operating Temperature	-4~140°F [-20~60°C]			
	Storage Temperature	-22~158°F [-30~70°C]			
	Relative Humidity	10 to 95% @ 40°C, non-condensing			
	Altitude (Air Pressure)	Up to 2,000 Meters (~80 kPa)			
	Shock Resistance	Tested to IEC 60068-2-27 (2008): 15G acceleration peak to peak, XYZ axis, 11ms pulse duration			
	Vibration Resistance	Tested to IEC 60068-2-64 (2019): 5~500Hz, 1.0 G_{rms}, XYZ axis, 30 mins duration			
	Rating	IP66 / NEMA 4 when panel mounted			
	Certification	cULus / CE / FCC Class A / RoHS			
Operating System Options	Microsoft Windows® Options	Microsoft Windows® 10 IoT Enterprise Embedded LTSC 64-bit (EPKEA) Microsoft Windows® 10 IoT Enterprise LTSC 64-bit (PKEA) Microsoft Windows® 11 IoT Enterprise Embedded LTSC 64-bit (EPKEA) Microsoft Windows® 11 IoT Enterprise LTSC 64-bit (PKEA) Microsoft Windows® 11 Professional			
	Linux® Options	N/A for Resistive Linux® Ubuntu Desktop for Capacitive	Linux® Ubuntu Desktop	N/A for Resistive Linux® Ubuntu Desktop for Capacitive	Linux® Ubuntu Desktop
Notes	Specifications subject to change without notice.				

7.0” ~ 23.8” Fanless Industrial Panel PC With Intel® Celeron® J6412 Processor

- UL Listed
- Microsoft Windows® 10, 11, Linux® OS Options
- Projected Capacitive and Resistive Touch
- Rugged IP66 Rated Aluminum Enclosure
- Wake on LAN Supported (WOL)

System	CPU	Intel® Celeron™ ElkHart Lake™ J6412 Quad-Core 2.0 GHz Processor		
	System Chipset	SoC		
	System Memory Options	1x DDR4 260-pin SO-DIMM RAM (8, 16, 32 GB)		
	TPM Chip	Yes (TPM 2.0 onboard)		
I/O Ports	USB	2 x USB 2.0 type A 2 x USB 3.2 type A		
	Serial	1 x DE9P RS-232/422/485, COM1 (default RS-232) 1 x DE9P RS-232, COM2		
	Audio	1 x 3.5 mm line out		
	LAN	1 x GbE RJ-45 1 x 2.5 GbE RJ-45		
	Wireless LAN	2 x Wireless LAN Antenna ports (covered unless optional Wi-Fi Expansion kit purchased)		
	Power	3-pin Terminal Block type, DC power input		
	Remote Power Switch	N/A		
	External Display	1 x DisplayPort 1.4 (max 4096 x 2160 pixels @ 60Hz)		
Expansion	Expansion Slot	Optional Wi-Fi kit (IEEE802.11ax card and 2 x antenna, Bluetooth 5.2 Support)		
Touch Screen	Type	Projected Capacitive (Multi-Touch Supported) or Resistive Touch	Projected Capacitive Touch (Multi-Touch Supported)	Projected Capacitive Touch (Multi-Touch Supported)
	Interface	USB		
	Light Transmission	90+%		
Display	Display Type	**19” SXGA TFT LCD**	**21.5” FHD TFT LCD**	**23.8” FHD TFT LCD**
	Max. Resolution	1280 x 1024	1920 x 1080	1920 x 1080
	Max. Color	16.7M	16.7M	16.7 M
	Luminance (cd/m²)	350	300	250
	View Angle (H°/V°)	170/160	178/178	178/178
	Contrast Ratio	1000:1	1000:1	3000:1
	Backlight Lifetime (hours)	50,000+	50,000+	30,000+
Storage	Solid State Drive Type	1 x M.2 2280 3D TLC SATA3		
	Solid State Drive Capacity Options	128, 256, 512 GB, 1 TB, 2 TB SSD		
	SD Card Slot	N/A		
Electrical	Input Voltage	9-36 VDC	9-36 VDC	9~36 VDC
	Input Current	1.5-6.0 A	1.88-7.52 A	1.91-7.64 A
	Input Power (max).	54 W	67.68 W	68.76 W
Mechanical	Dimensions (W x H x D)	18.43 x 14.96 x 3.23” [468 x 380 x 82 mm]	21.94 x 14.26 x 3.23” [557.3 x 362.3 x 82 mm]	25.20 x 15.55 x 3.46” [640 x 395 x 88 mm]
	Net Weight	~ 15.94 lbs [7.2 kg]	~ 15.21 lbs [6.9 kg]	~ 20.79 lbs [9.4 kg]
	Panel Cutout Dimensions (W x H)	17.72 x 14.25” [450 x 362 mm]	21.22 x 13.54” [539 x 344 mm]	23.62 x 14.25” [600 x 362 mm]
	Mounting	Panel mounting, VESA 100 x 100 mm		
	Construction	Die-cast Aluminum		
Environmental	Operating Temperature	-4~140°F [-20~60°C]	32~122°F [0~50°C]	
	Storage Temperature	-22~158°F [-30~70°C]		
	Relative Humidity	10 to 95% @ 40°C, non-condensing		
	Altitude (Air Pressure)	Up to 2,000 Meters (~80 kPa)		
	Shock Resistance	Tested to IEC 60068-2-27 (2008): 15G acceleration peak to peak, XYZ axis, 11ms pulse duration		
	Vibration Resistance	Tested to IEC 60068-2-64 (2019): 5~500Hz, 1.0 G_{rms}, XYZ axis, 30 mins duration		
	Rating	IP66 / NEMA 4 when panel mounted		
	Certification	cULus / CE / FCC Class A / RoHS		
Operating System Options	Microsoft Windows® Options	Microsoft Windows® 10 IoT Enterprise Embedded LTSC 64-bit (EPKEA) Microsoft Windows® 10 IoT Enterprise LTSC 64-bit (PKEA) Microsoft Windows® 11 IoT Enterprise Embedded LTSC 64-bit (EPKEA) Microsoft Windows® 11 IoT Enterprise LTSC 64-bit (PKEA) Microsoft Windows® 11 Professional		
	Linux® Options	N/A for Resistive Linux® Ubuntu Desktop for Capacitive	Linux® Ubuntu Desktop	
Notes	Specifications subject to change without notice.			

OMI6807

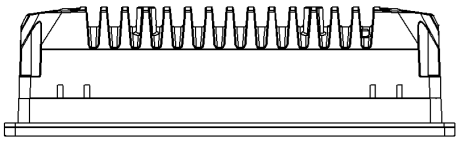

Top View

Dimensions are in inches [mm]

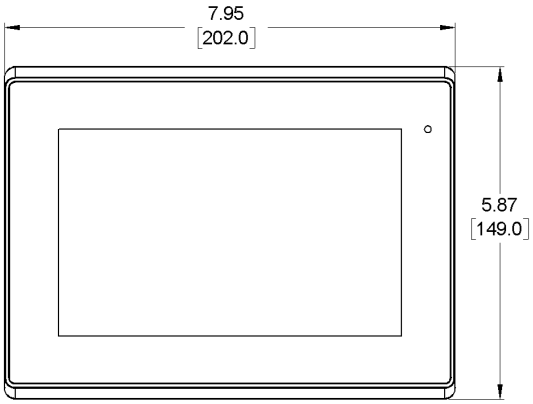

Front View

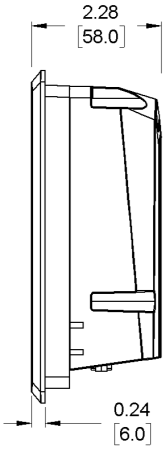

Side View

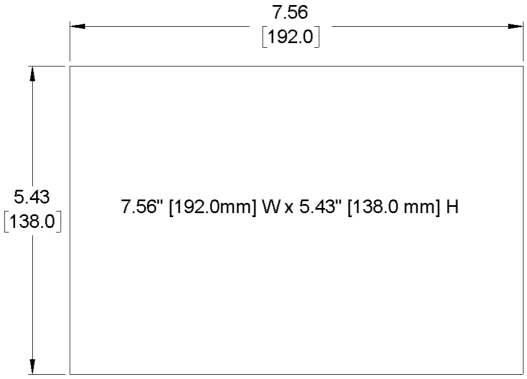

Cutout Dimensions

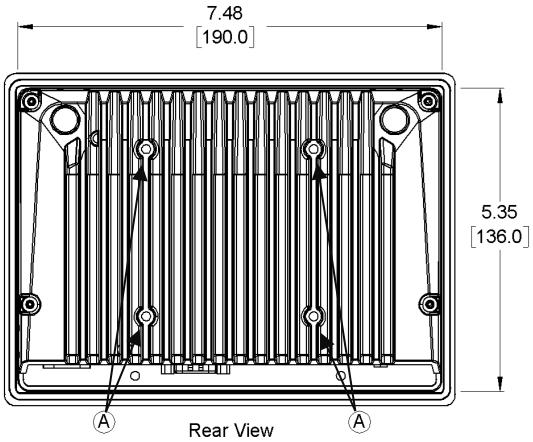

Rear View

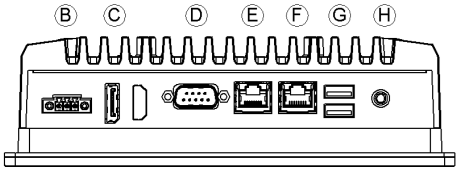

Bottom View

A	VESA 75 mm Screw Holes
B	Power Connector
C	DisplayPort
D	DE9P COM Port (Configurable)
E	2.5 Gigabit Ethernet Port
F	Gigabit Ethernet Port
G	USB 3.2 Host Ports
H	3.5mm Line-Out

OMI6808

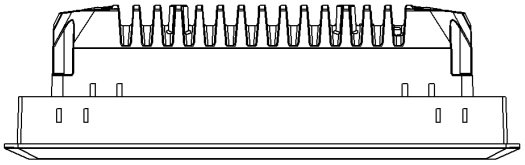

Top View

Dimensions are in inches [mm]

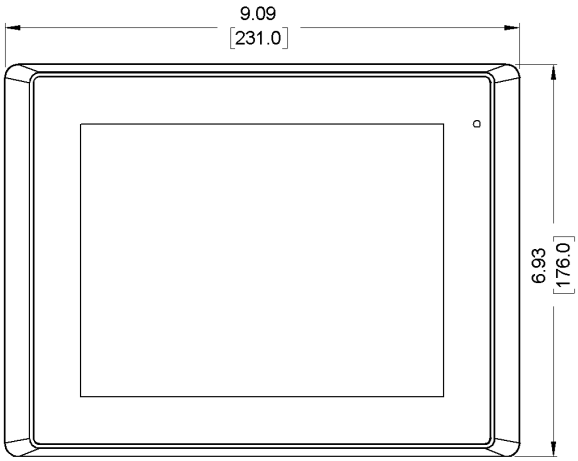

Front View

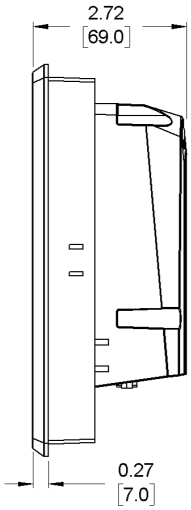

Side View

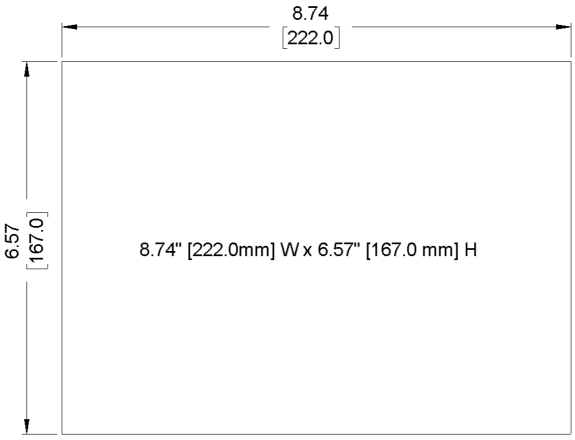

Cutout Dimensions

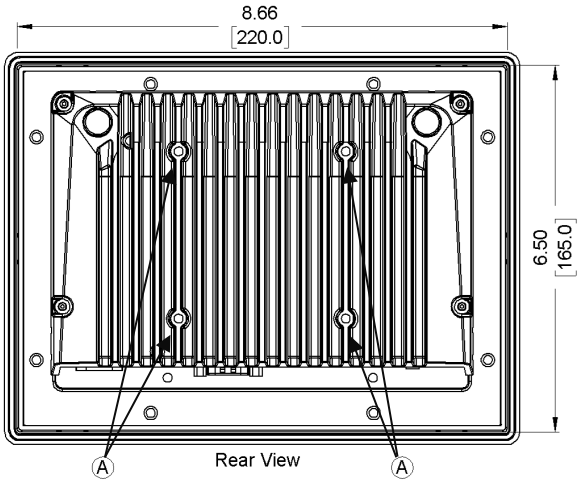

Rear View

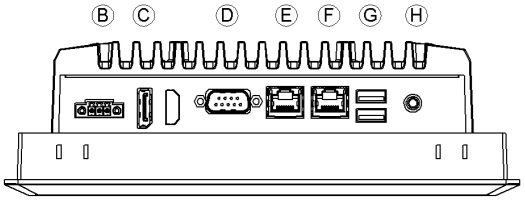

Bottom View

A	VESA 75 mm Screw Holes
B	Power Connector
C	DisplayPort
D	DE9P COM Port (Configurable)
E	2.5 Gigabit Ethernet Port
F	Gigabit Ethernet Port
G	USB 3.2 Host Ports
H	3.5mm Line-Out

OMI6810

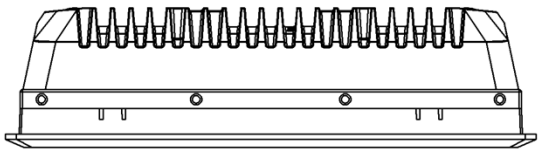

Top View

DIMENSIONS ARE IN INCHES [MM]

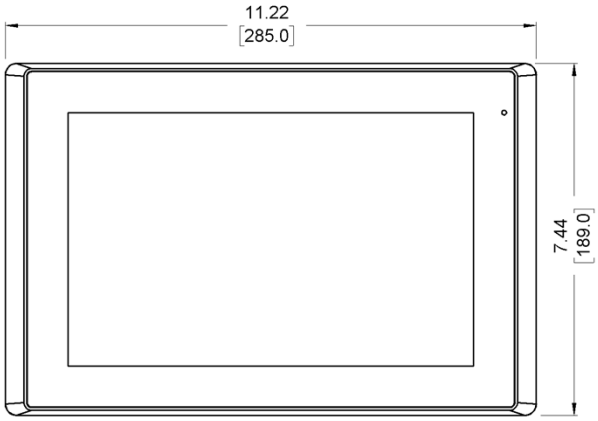

Front View

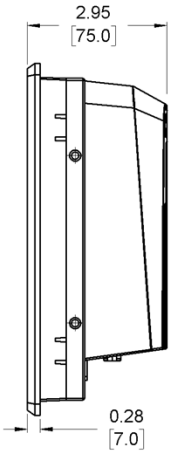

Side View

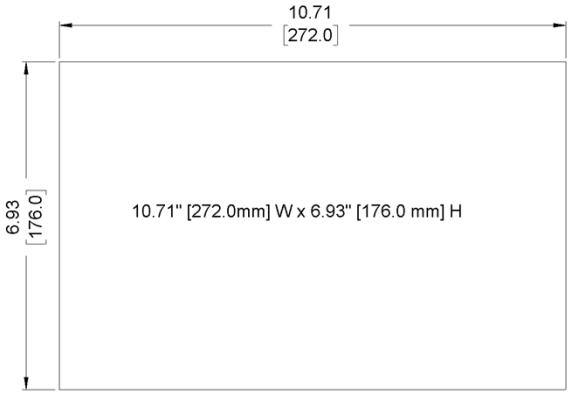

Cutout Dimensions

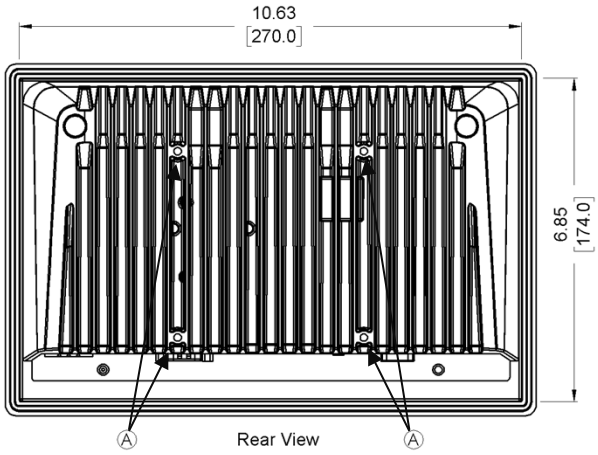

Rear View

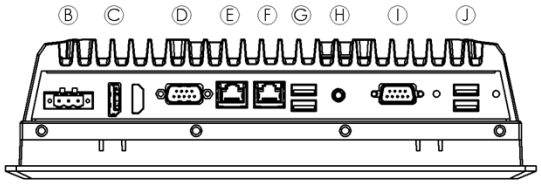

Bottom View

A	VESA 100 mm Screw Holes
B	Power Connector
C	DisplayPort
D	DE9P COM Port (Configurable)
E	2.5 Gigabit Ethernet Port
F	Gigabit Ethernet Port
G	USB 3.2 Host Ports
H	3.5mm Line-Out
I	DE9P COM Port (RS-232)
J	USB 2.0 Host Ports

OMI6812

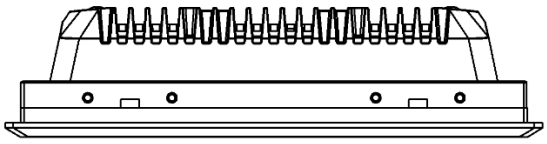

Top View

DIMENSIONS ARE IN INCHES [MM]

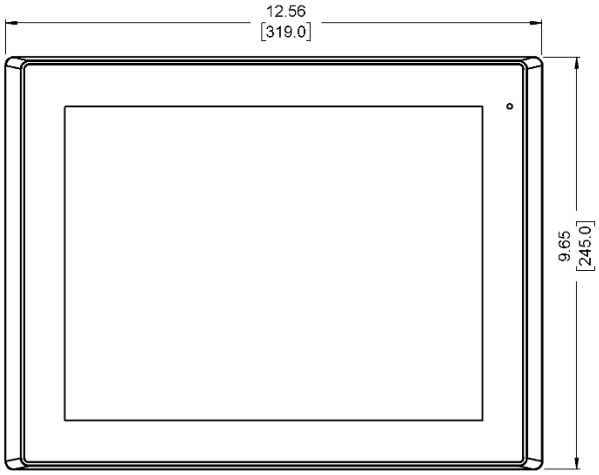

Front View

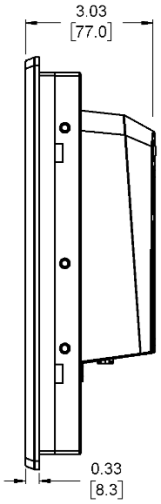

Side View

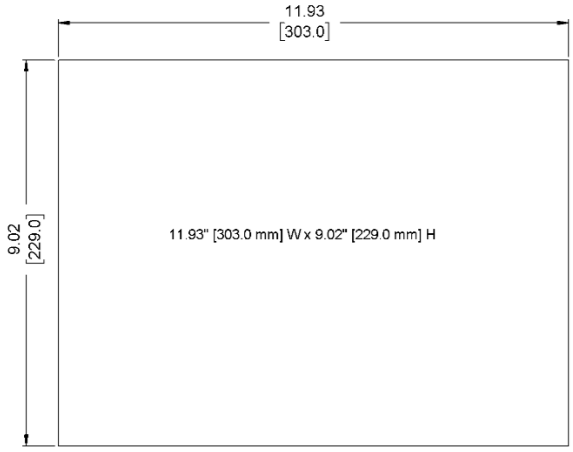

Cutout Dimensions

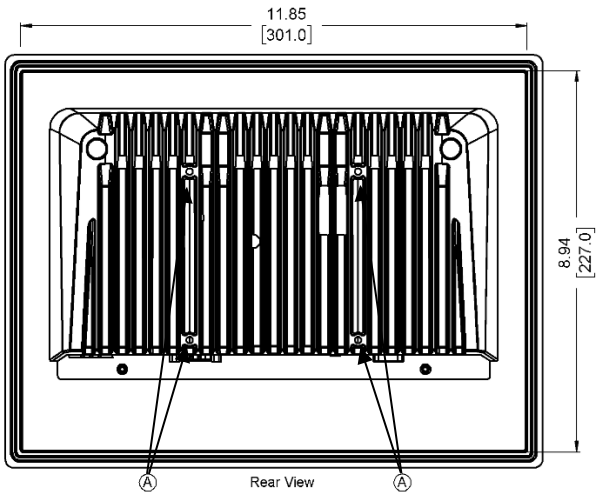

Rear View

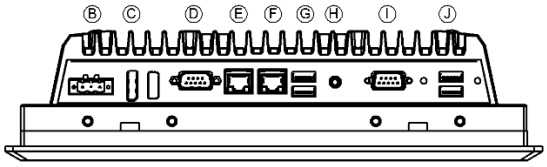

Bottom View

A	VESA 100 mm Screw Holes
B	Power Connector
C	DisplayPort
D	DE9P COM Port (Configurable)
E	2.5 Gigabit Ethernet Port
F	Gigabit Ethernet Port
G	USB 3.2 Host Ports
H	3.5mm Line-Out
I	DE9P COM Port (RS-232)
J	USB 2.0 Host Ports

OMI6815

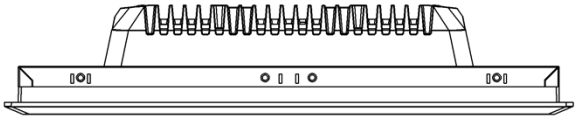

Top View

DIMENSIONS ARE IN INCHES [MM]

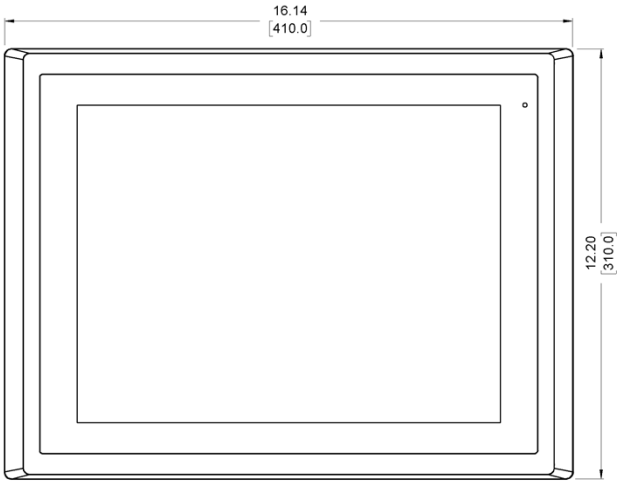

Front View

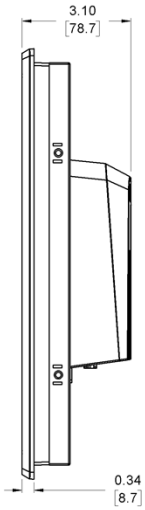

Side View

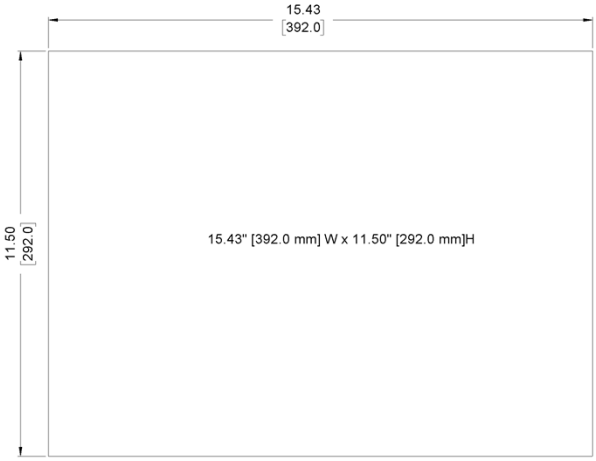

Cutout Dimensions

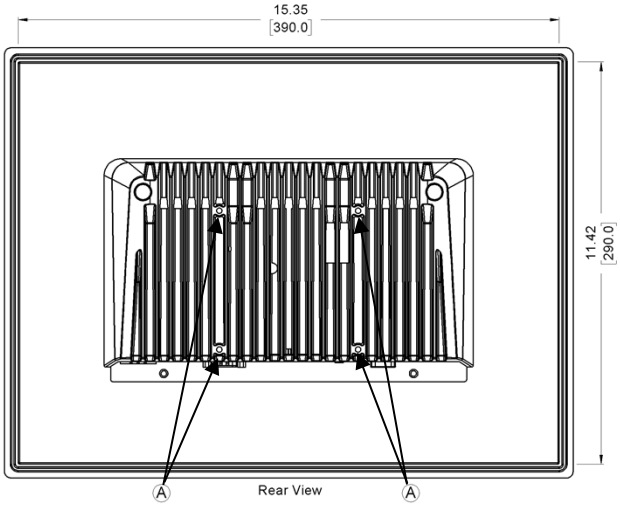

Rear View

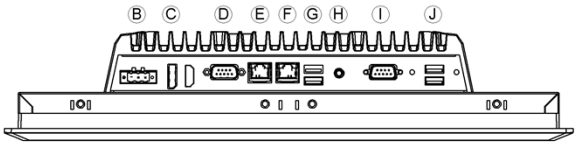

Bottom View

A	VESA 100 mm Screw Holes
B	Power Connector
C	DisplayPort
D	DE9P COM Port (Configurable)
E	2.5 Gigabit Ethernet Port
F	Gigabit Ethernet Port
G	USB 3.2 Host Ports
H	3.5mm Line-Out
I	DE9P COM Port (RS-232)
J	USB 2.0 Host Ports

OMI6816

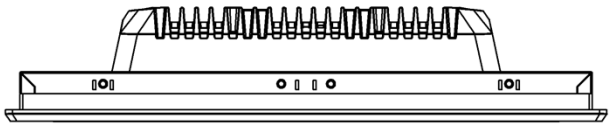

Top View

DIMENSIONS ARE IN INCHES [MM]

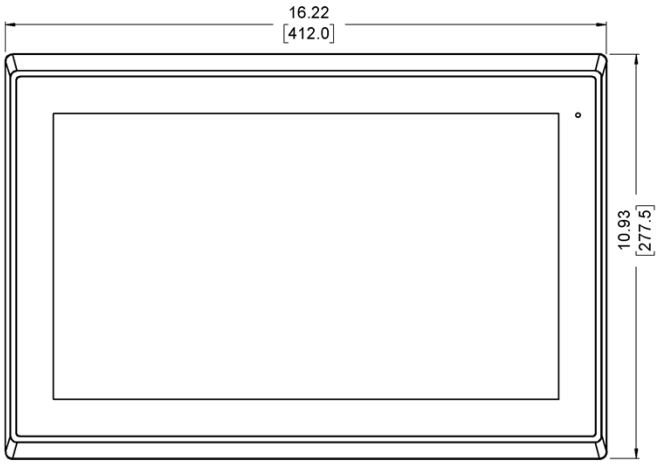

Front View

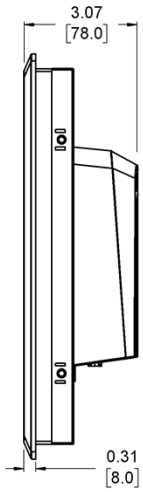

Side View

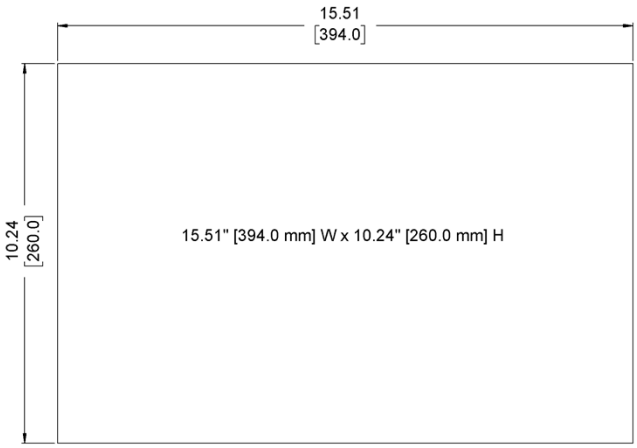

Cutout Dimensions

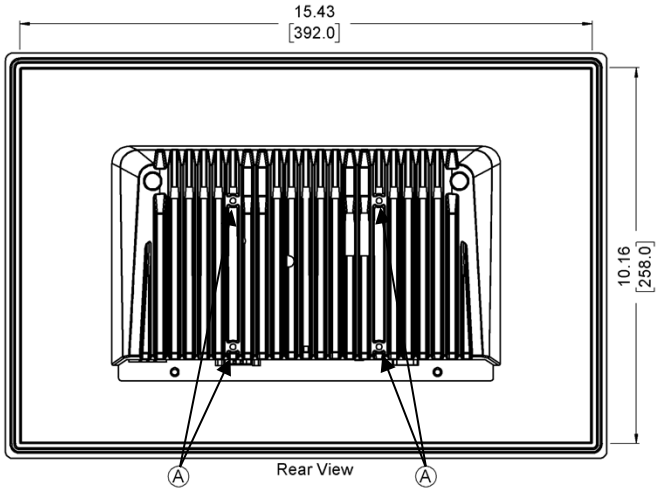

Rear View

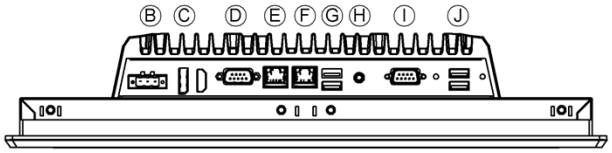

Bottom View

A	VESA 100 mm Screw Holes
B	Power Connector
C	DisplayPort
D	DE9P COM Port (Configurable)
E	2.5 Gigabit Ethernet Port
F	Gigabit Ethernet Port
G	USB 3.2 Host Ports
H	3.5mm Line-Out
I	DE9P COM Port (RS-232)
J	USB 2.0 Host Ports

OMI6817

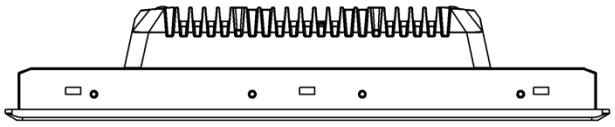

Top View

DIMENSIONS ARE IN INCHES [MM]

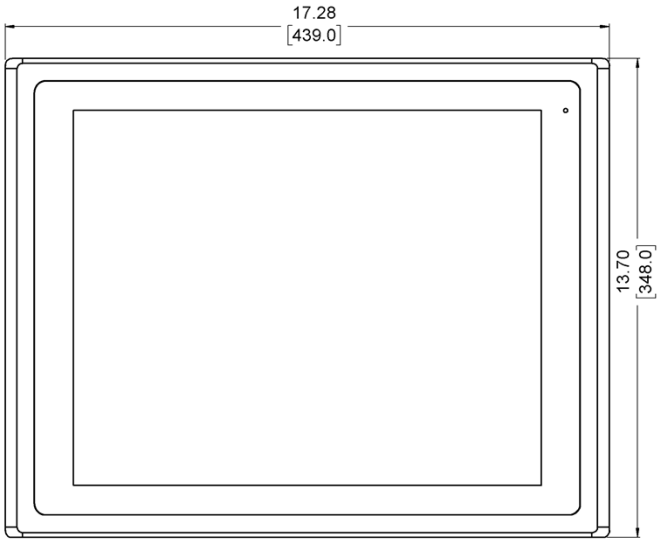

Front View

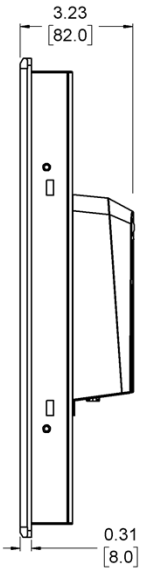

Side View

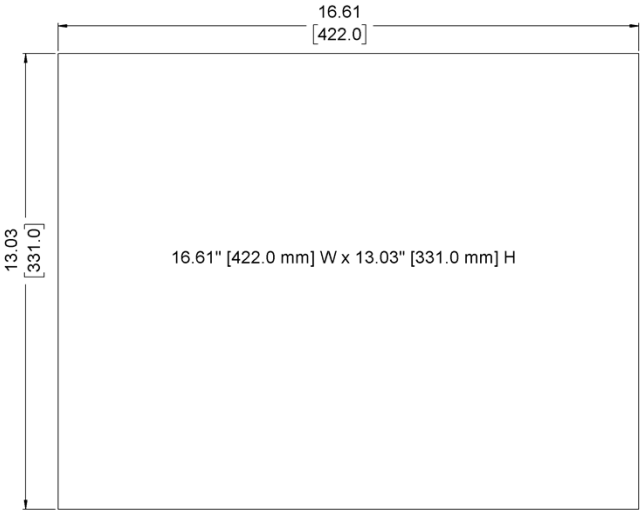

Cutout Dimensions

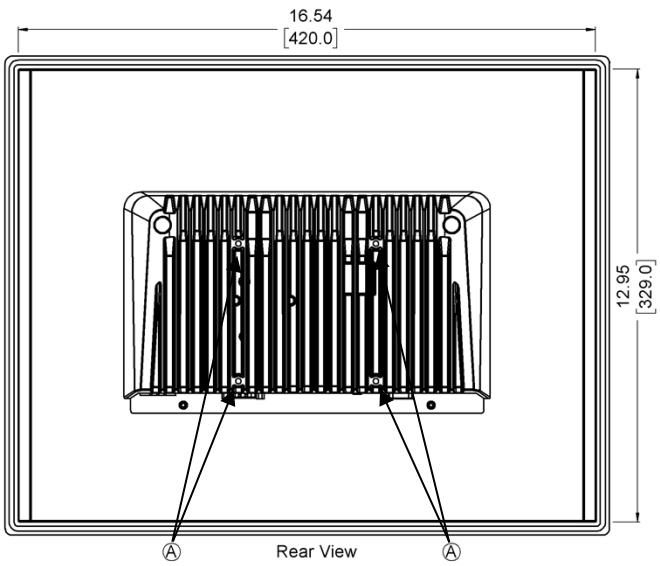

Rear View

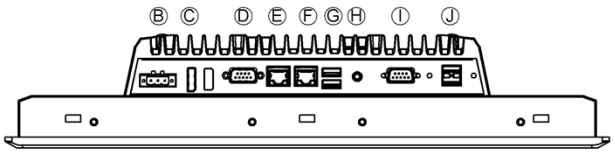

Bottom View

A	VESA 100 mm Screw Holes
B	Power Connector
C	DisplayPort
D	DE9P COM Port (Configurable)
E	2.5 Gigabit Ethernet Port
F	Gigabit Ethernet Port
G	USB 3.2 Host Ports
H	3.5mm Line-Out
I	DE9P COM Port (RS-232)
J	USB 2.0 Host Ports

OMI6818

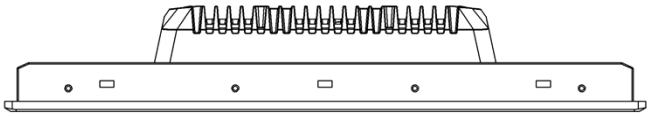

Top View

DIMENSIONS ARE IN INCHES [MM]

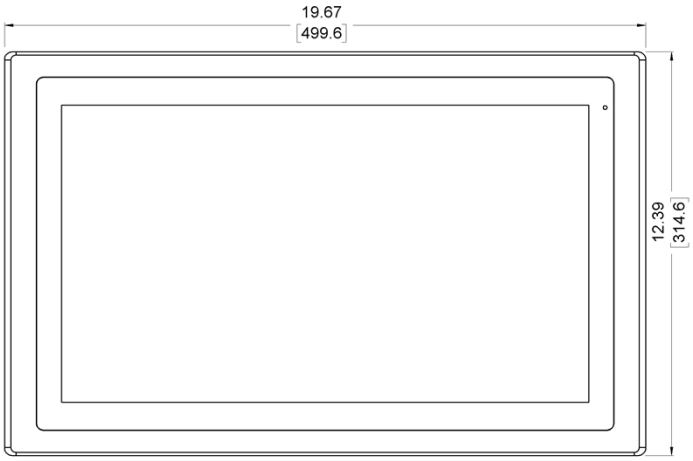

Front View

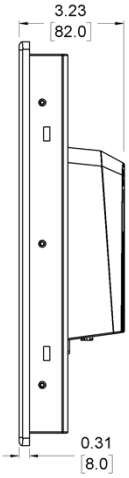

Side View

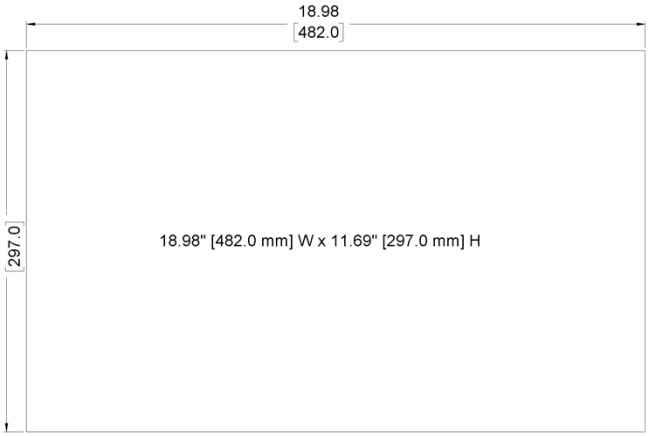

Cutout Dimensions

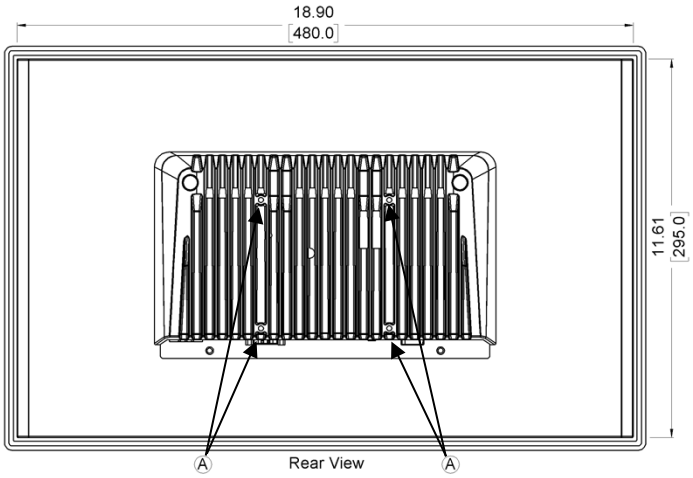

Rear View

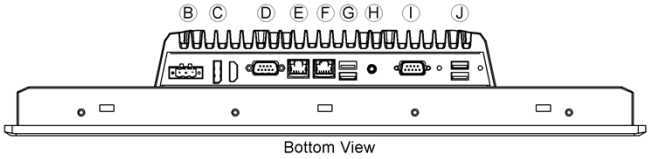

Bottom View

A	VESA 100 mm Screw Holes
B	Power Connector
C	DisplayPort
D	DE9P COM Port (Configurable)
E	2.5 Gigabit Ethernet Port
F	Gigabit Ethernet Port
G	USB 3.2 Host Ports
H	3.5mm Line-Out
I	DE9P COM Port (RS-232)
J	USB 2.0 Host Ports

OMI6819

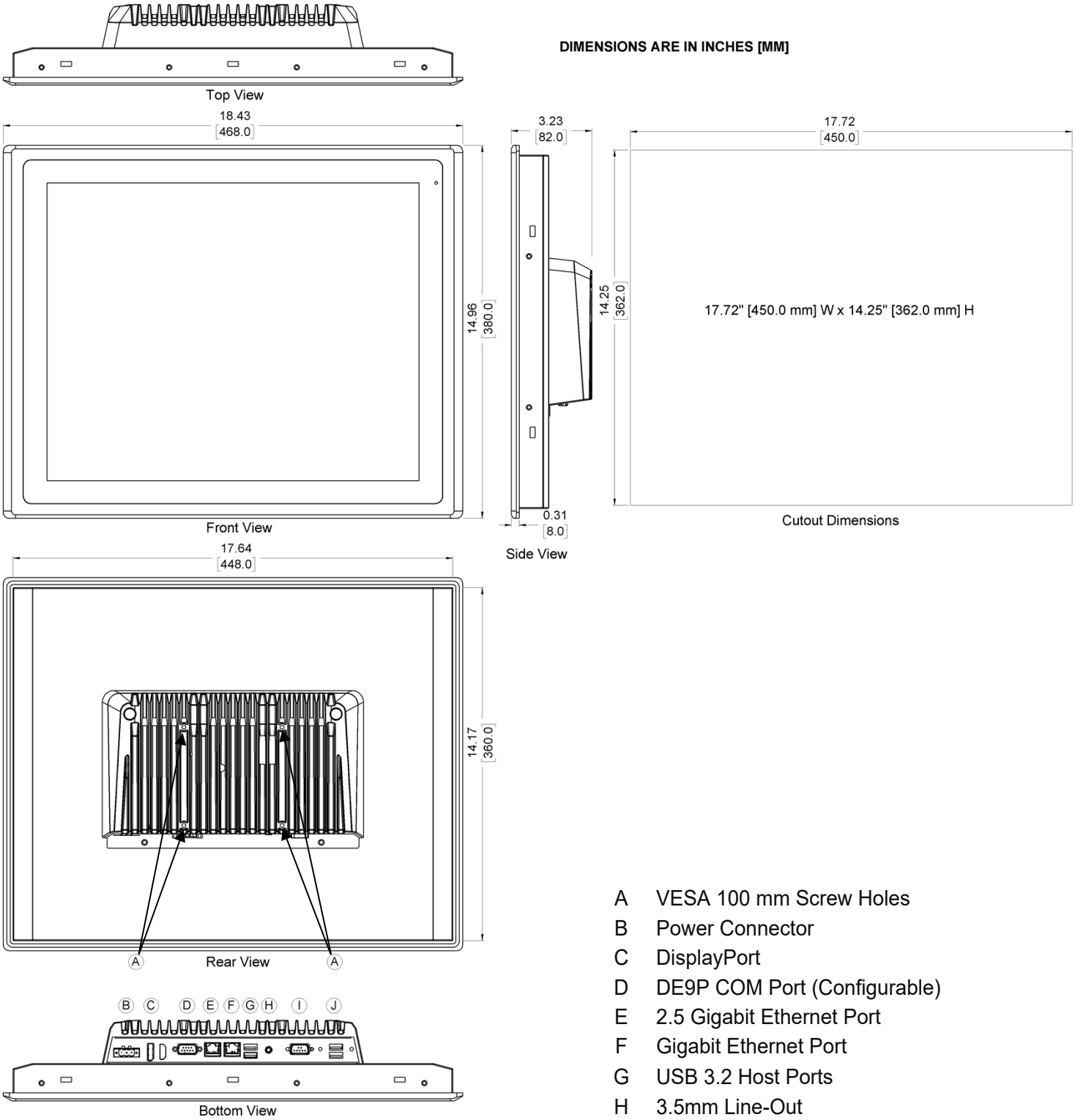

A	VESA 100 mm Screw Holes
B	Power Connector
C	DisplayPort
D	DE9P COM Port (Configurable)
E	2.5 Gigabit Ethernet Port
F	Gigabit Ethernet Port
G	USB 3.2 Host Ports
H	3.5mm Line-Out
I	DE9P COM Port (RS-232)
J	USB 2.0 Host Ports

OMI6821

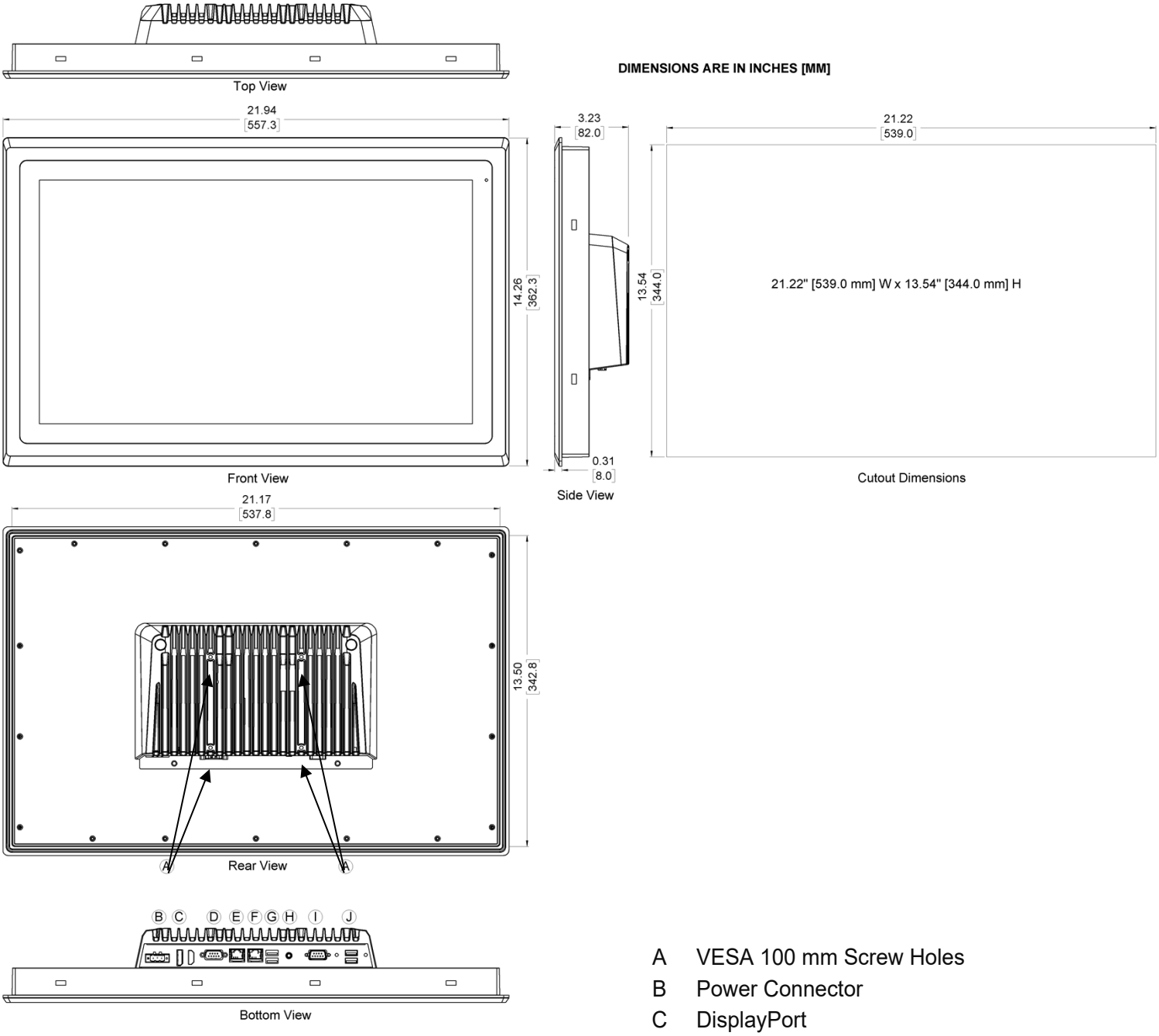

A	VESA 100 mm Screw Holes
B	Power Connector
C	DisplayPort
D	DE9P COM Port (Configurable)
E	2.5 Gigabit Ethernet Port
F	Gigabit Ethernet Port
G	USB 3.2 Host Ports
H	3.5mm Line-Out
I	DE9P COM Port (RS-232)
J	USB 2.0 Host Ports

OMI6824

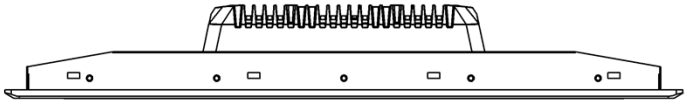

Top View

DIMENSIONS ARE IN INCHES [MM]

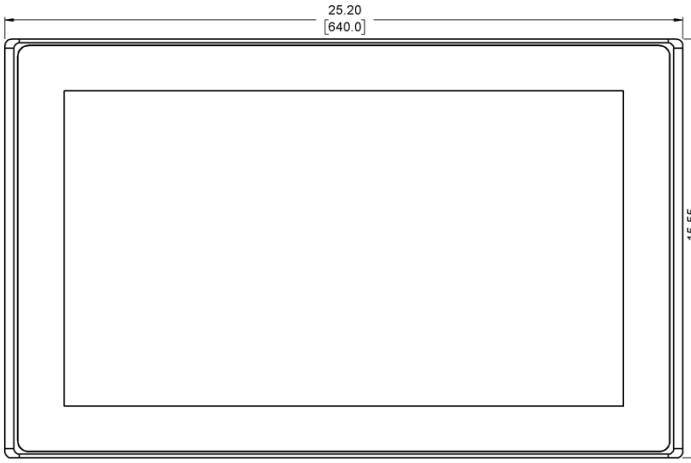

Front View

Side View

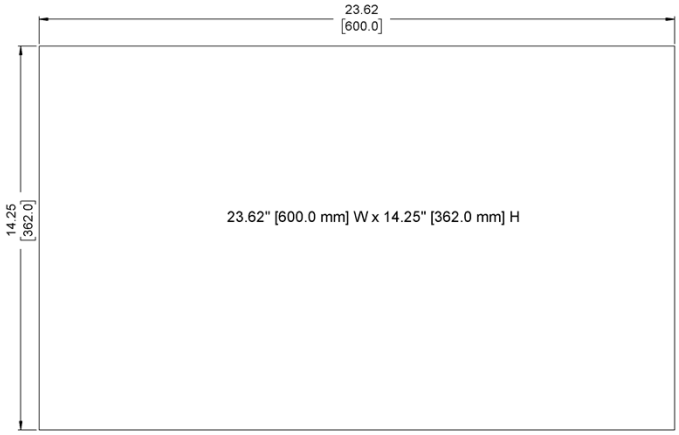

Cutout Dimensions

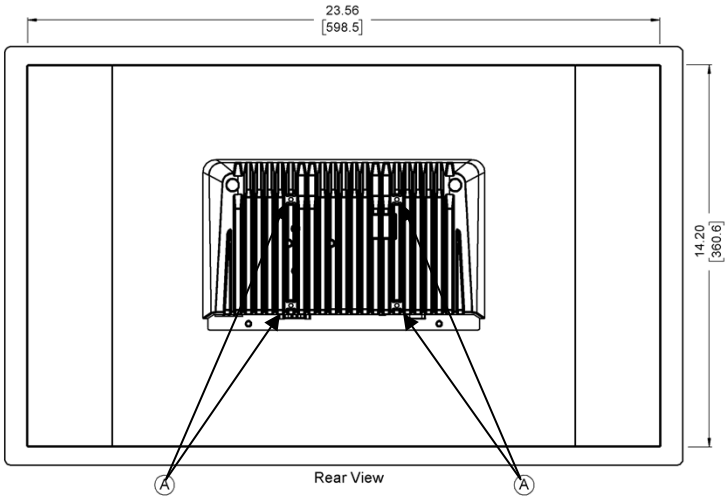

Rear View

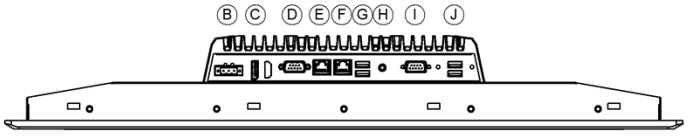

Bottom View

A	VESA 100 mm Screw Holes
B	Power Connector
C	DisplayPort
D	DE9P COM Port (Configurable)
E	2.5 Gigabit Ethernet Port
F	Gigabit Ethernet Port
G	USB 3.2 Host Ports
H	3.5mm Line-Out
I	DE9P COM Port (RS-232)
J	USB 2.0 Host Ports

Why Buy A Maple Industrial PC

In addition to our powerful and affordable hardware, we'll also continue to support your company long after a sale. Wide product selection, large in-stock inventory, outstanding product warranty, free technical support and software, and in-house repairs with quick turnaround times, Maple Systems has your business covered.

Customize To Meet Your Needs

Companies have chosen Maple Systems solutions over Allen-Bradley, Omron, Siemens, Panasonic, and so many others, in hundreds of applications, in every industry, and in every type of organization. Our Industrial PCs are designed to resolve your toughest automation challenges in manufacturing, processing, and fabrication environments, and because we offer thousands of different configurations, designing your IPC to meet your unique requirements is easy.

All our Industrial PCs are ideal for applications in industrial automation, healthcare, manufacturing, oil & gas, packaging, building automation, water, energy, agriculture, food & beverage, and more. Our offerings include high brightness/sunlight readable displays, extended temperature IPCs, stainless steel enclosures, and Class I, Div 2 certified IPCs. Learn more about the industries we serve and discover why more and more companies are choosing Maple Systems.

Supports Your 3rd Party Software

Since our Industrial PCs can be configured with either a Windows™ or Linux™ Operating System, adding your own software is easy. Don't be tied to expensive industrial computers or HMIs just because of a name. Our IPCs support FactoryTalk®, Ignition SCADA®, Emerson Ovation®, Simatic SCADA®, Predator Touch HMI®, and hundreds of other HMI and SCADA software solutions.

We are a proud partner of Award-winning AVEVA™ Edge. This powerful HMI/SCADA software package enables you to create custom industrial control applications for your unique industry, putting you in the driver's seat of creating your industrial process. With easy-to-use commands/ tool bars and a Microsoft Windows® programming environment, AVEVA™ Edge's feature-rich application puts you in the driver's seat of creating your industrial process. Learn more

about AVEVA Edge.

Build your SCADA

We offer all the components you need to create your own unique level of supervisory data acquisition and control, from the simplest stand-alone machine to sophisticated multi-device networked production line(s), all the way to enterprise-level operations and IIoT functionalities leveraging cloud connectivity.

Our products can help you standardize communications between devices, gluing different systems together for one source to your SCADA. No need to redesign your entire application. Keep the components that are already working for you, just add Maple Systems components to grow your abilities to supervise, control, and acquire data.

Application Story

Pharmaceutical Equipment

Adding a Maple Systems Stainless Steel Industrial Panel PC with Wi Fi to an existing machine saved this OEM time and money

This OEM manufacturer uses a Maple Systems Industrial Panel PC for their production-series tablet pressing machines. The rotary tablet press boasts features essential for successful mid-sized tableting without the full-scale price. This application required a cost effective 12" panel touch screen industrial PC with enough computing power for their custom software and reporting system. They also required the front bezel be stainless steel with a IP69K rating to meet washdown sanitization requirements. See how we support the Pharmaceutical and Medical Industry.

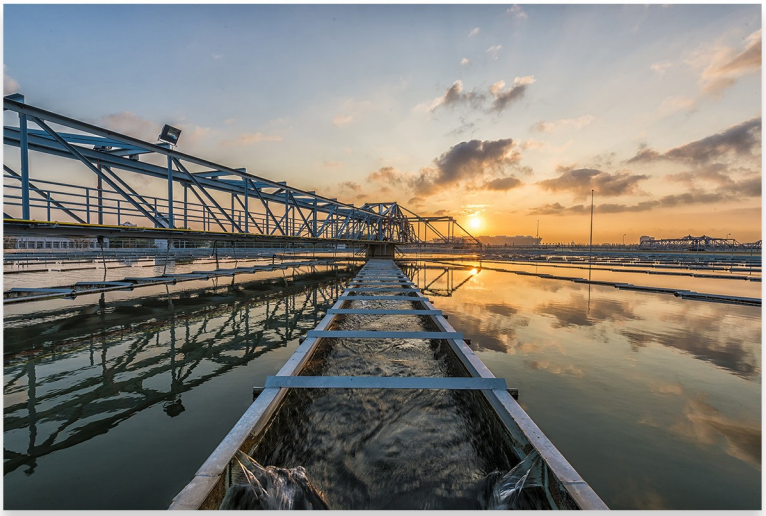

Case Study

Water / Wastewater Treatment

Our High Brightness Industrial Panel PC with Wi-Fi checked all the boxes for this System Integrator

During their large revamping of a utility control system, Aqua Sierra's customer North Tahoe Utilities needed a PC- based HMI to run a simple Wonderware SCADA project as an interface. The PC needed to allow 3rd party software logging and reporting tools for their utility management system. The control room facility is climate controlled with large windows and bright overhead lighting. The remote facility did not have Ethernet cabling out to the
PC location, however there was a Wi-Fi router connection nearby. Read how we support the Water & Wastewater industry.

Application Story

Dairy / Agriculture Equipment

The Stainless Steel enclosure makes this Industrial Panel PC the right choice for the food and beverage industry

This customer is a leading OEM manufacturer of custom stainless steel processing equipment and a preferred provider of quality products and services to the cheese, dairy, food, beverage and other sanitary industries. The customer's
dairy processing equipment required an IPC that operators can interface with while wearing gloves. Another major requirement is that the PC be IP69K washdown rated to endure the regular cleaning and disinfecting required; and for compliance and record keeping, the customer needed
real time data logging and storage using a 3rd party historian application running on the PC. Read more about the Food & Beverage OEMs we support everyday.