IPC2410A

Compact Fanless Industrial PC with Intel® Atom® x6425RE Elkhart Lake CPU



- Optional 4G Module allows for 4G/LTE Data Network Usage*
- Wide Operating Temperature Range (-40~60°C)
- Microsoft Windows® 10, Windows® 11, and Linux® Ubuntu OS Options
- Optional Wi-Fi Kit with Bluetooth 5.2 support
- Integrate with AVEVA™ Edge Software

System	**CPU**	Intel® Quad-Core Atom® x6425RE @ 1.9 GHz
	System Chipset	SoC
	CPU Graphics	Intel UHD Graphics
	System Memory Options	1 x DDR4 260-pin SO-DIMM RAM (4, 8, 16, 32 GB)
	TPM Module	Yes (TPM 2.0)
Front Panel I/O	**Power**	1 x VDC 3-Pin Terminal Block
	Power Switch	1 x Momentary-Type Toggle Switch
	SIM Card Slot*	1x Micro-SIM Card slot (covered unless optional 4G/LTE Module is purchased – see notes)
	Serial	1 x RS-232/422/485 DE-9P: COM1 (default RS-232)
	Audio	1 x 3.5 mm Line-out
	LAN	2 x 2.5GbE RJ-45
	Display Interface	1 x HDMI 2.0a (max. 4096 x 2160 pixels @60Hz) 1 x DisplayPort 1.2a (max. 4096 x 2304 pixels @60Hz)
	USB	2 x USB 3.0 Type A 3 x USB 2.0 Type A
Rear Panel I/O	**Digital I/O**	1 x 16-pin Terminal Block connector (8-in, 8-out)
	USB	2 x USB 2.0 type A
	Serial	1 x RS-232/422/485 DE-9P: COM2 (default RS-232)
	Wireless LAN	2 x Wireless LAN Antenna ports (covered unless optional Wi-Fi Expansion kit purchased)
Storage	**Solid State Drive**	1 x M.2 2280 NVME 3D TLC (128, 256, 512 GB, 1 TB SSD)
	SD Card Slot	N/A
Expansion	**Expansion Option**	Optional Wi-Fi Kit (IEEE802.11a/b/g/n/ac/ax card, Bluetooth 5.2 Support) Optional 4G/LTE Data Network Usage Kit
Electrical	**Input Voltage**	12/24 VDC +/- 10%
	Input Current	6 A Max.
	Input Power	72W Max.
Mechanical	**Construction**	Green Anodized Aluminum Heatsink, Black Steel Chassis
	Rating	IP30
	Mounting	VESA 75 x 75 mm Wall Mounting Kit Included
	Dimension (W x H x D)	8.58 x 5.55 x 1.97 inches [218 x 141 x 50 mm]
	Net Weight	Approx. 4.4 lbs. [2.0 kg]
Environmental	**Operating Temperature**	-40~140°F [-40~60°C]
	Storage Temperature	-40~185°F [-40~85°C]
	Storage Humidity	20 to 90%, non-condensing
	Certification	CE / FCC Class A / RoHS
Operating System	**Microsoft Windows® Options**	Microsoft Windows® 10 IoT Enterprise Embedded LTSC 64-bit (EPKEA) Microsoft Windows® 10 IoT Enterprise LTSC 64-bit (PKEA) Microsoft Windows® 11 IoT Enterprise Embedded LTSC 64-bit (EPKEA) Microsoft Windows® 11 IoT Enterprise LTSC 64-bit (PKEA) Microsoft Windows® 11 Professional
	Linux® Options	Linux® Ubuntu Desktop Linux® Ubuntu Server
Notes	** To use SIM Card slot, 4G/LTE Module must be purchased and installed by Maple Systems. 4G/LTE connectivity not guaranteed, and applies to select Network Providers only (T-Mobile, AT&T, Verizon). 4G/LTE signal strength, network connectivity and data transmission speeds subject to network and installation limitations and are not guaranteed.* Specifications subject to change without notice	

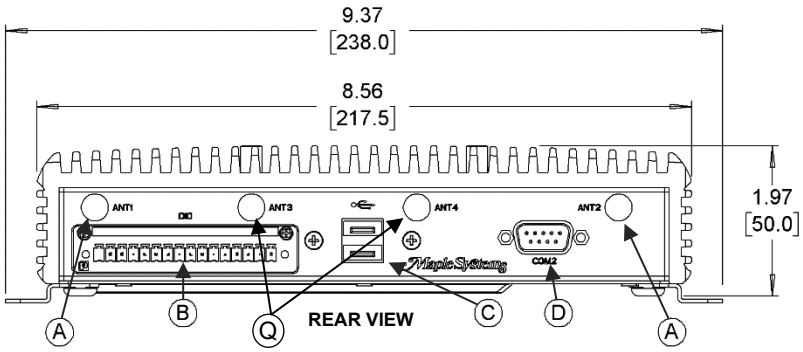

REAR VIEW

DIMENSIONS ARE IN INCHES [MM]

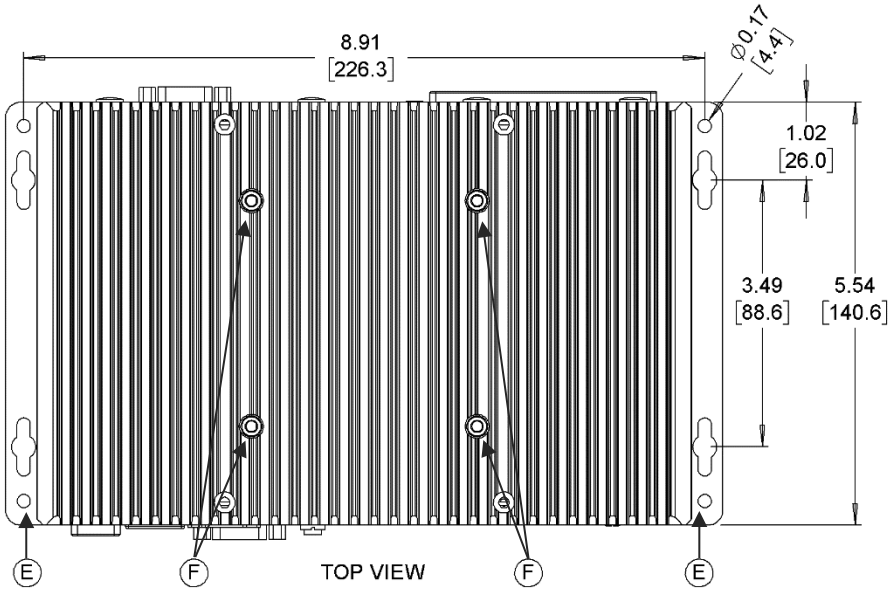

TOP VIEW

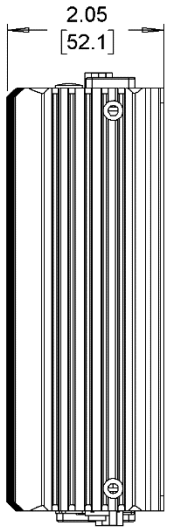

SIDE VIEW

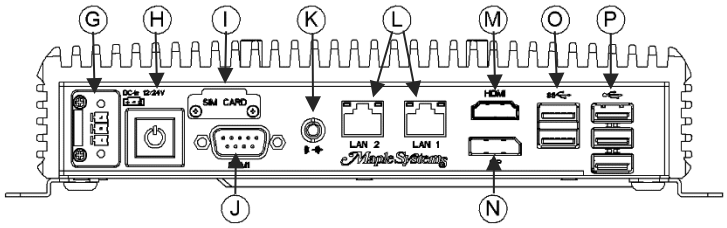

FRONT VIEW

A	Optional Antenna Fixture (WiFi/Bluetooth)
B	Digital I/O Terminal Block
C	USB 2.0 Host Port x2
D	Serial DE-9P COM1
E	Wall Mount Brackets
F	VESA 75x75mm M4 Mount Holes
G	DC Power Input
H	Illuminated Power Button
I	Micro-SIM Card Slot (Optional)
J	Serial DE-9P COM2
K	3.5mm Line-Out
L	2.5GbE LAN RJ45 x2
M	HDMI 2.0 Output
N	DisplayPort Output
O	USB 3.0 Host Port x2
P	USB 2.0 Host Port x3
Q	Optional Antenna Fixture (4G/LTE)

Why Buy A Maple Industrial PC

In addition to our powerful and affordable hardware, we'll also continue to support your company long after a sale. Wide product selection, large in-stock inventory, outstanding product warranty, free technical support and software, and in-house repairs with quick turnaround times, Maple Systems has your business covered.



Customize To Meet Your Needs

Companies have chosen Maple Systems solutions over Allen-Bradley, Omron, Siemens, Panasonic, and so many others, in hundreds of applications, in every industry, and in every type of organization. Our Industrial PCs are designed to resolve your toughest automation challenges in manufacturing, processing, and fabrication environments, and because we offer thousands of different configurations, designing your IPC to meet your unique requirements is easy.

All our Industrial PCs are ideal for applications in industrial automation, healthcare, manufacturing, oil & gas, packaging, building automation, water, energy, agriculture, food & beverage, and more. Our offerings include high brightness/sunlight readable displays, extended temperature IPCs, stainless steel enclosures, and Class I, Div 2 certified IPCs. Learn more about the industries we serve and discover why more and more companies are choosing Maple Systems.

Supports Your 3rd Party Software

Since our Industrial PCs can be configured with either a Windows™ or Linux™ Operating System, adding your own software is easy. Don't be tied to expensive industrial computers or HMIs just because of a name. Our IPCs support FactoryTalk®, Ignition SCADA®, Emerson Ovation®, Simatic SCADA®, Predator Touch HMI®, and hundreds of other HMI and SCADA software solutions.

We are a proud partner of Award-winning AVEVA™ Edge. This powerful HMI/SCADA software package enables you to create custom industrial control applications for your unique industry, putting you in the driver's seat of creating your industrial process. With easy-to-use commands/ tool bars and a Microsoft Windows® programming environment, AVEVA™ Edge's feature-rich application puts you in the driver's seat of creating your industrial process. Learn more about AVEVA Edge.

Build your SCADA

We offer all the components you need to create your own unique level of supervisory data acquisition and control, from the simplest stand-alone machine to sophisticated multi-device networked production line(s), all the way to enterprise-level operations and IIoT functionalities leveraging cloud connectivity.

Our products can help you standardize communications between devices, gluing different systems together for one source to your SCADA. No need to redesign your entire application. Keep the components that are already working for you, just add Maple Systems components to grow your abilities to supervise, control, and acquire data.

Application Story

Pharmaceutical Equipment

Adding a Maple Systems Stainless Steel Industrial Panel PC with Wi Fi to an existing machine saved this OEM time and money

This OEM manufacturer uses a Maple Systems Industrial Panel PC for their production-series tablet pressing machines. The rotary tablet press boasts features essential for successful mid-sized tableting without the full-scale price. This application required a cost effective 12" panel touch screen industrial PC with enough computing power for their custom software and reporting system. They also required the front bezel be stainless steel with a IP69K rating to meet washdown sanitization requirements. See how we support the Pharmaceutical and Medical Industry.

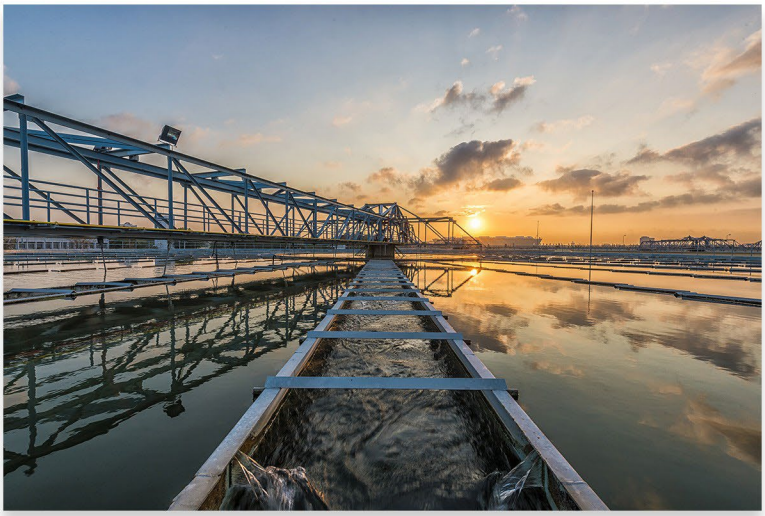

Case Study

Water / Wastewater Treatment

Our High Brightness Industrial Panel PC with Wi-Fi checked all the boxes for this System Integrator

During their large revamping of a utility control system, Aqua Sierra's customer North Tahoe Utilities needed a PC-based HMI to run a simple Wonderware SCADA project as an interface. The PC needed to allow 3rd party software logging and reporting tools for their utility management system. The control room facility is climate controlled with large windows and bright overhead lighting. The remote facility did not have Ethernet cabling out to the PC location, however there was a Wi-Fi router connection nearby. Read how we support the Water & Wastewater industry.

Application Story

Dairy / Agriculture Equipment

The Stainless Steel enclosure makes this Industrial Panel PC the right choice for the food and beverage industry

This customer is a leading OEM manufacturer of custom stainless steel processing equipment and a preferred provider of quality products and services to the cheese, dairy, food, beverage and other sanitary industries. The customer's dairy processing equipment required an IPC that operators can interface with while wearing gloves. Another major requirement is that the PC be IP69K washdown rated to endure the regular cleaning and disinfecting required; and for compliance and record keeping, the customer needed real time data logging and storage using a 3rd party historian application running on the PC. Read more about the Food & Beverage OEMs we support everyday.

