# cMT3072XHT | High-Performance HMI Series



## 7.0” Touchscreen HMI with High Resolution

- High Resolution Wide Viewing Angle Display
- Aluminum Bezel provides IP66 Protection for Washdown Environments
- Quad Core processor allows for the HMI project and PLC project to run on its own processor
- CANbus Support: CANopen, CANbus 2.0A/B, SAE J1939 Protocols
- SQL Database, Database Server, OPC-UA Server

| | | |
|---|---|---|
| **System** | **CPU** | Quad-Core RISC |
| | **Memory (RAM)** | 1 GB |
| | **Memory (Flash)** | 4 GB |
| | **RTC** | Built-in |
| **I/O Ports** | **Serial** | 1 x DE9P COM1: RS-232, COM3: RS-232* |
| | | 1 x DE9S COM2: RS-485 2 or 4 wire, COM3: RS-485 2 wire, CANbus |
| | **LAN** | 2 x 10/100 Base-T RJ-45 |
| | **CANbus** | Yes |
| | **USB Host** | 1 x USB 2.0 |
| | **USB Client** | N/A |
| | **Audio** | N/A |
| | **Video** | N/A |
| | **Wi-Fi** | N/A |
| | **HDMI®** | N/A |
| | **SD Card Slot** | N/A |
| **Display** | **Display Type** | 7" WVA LCD |
| | **Size (W x H)** | 6.02 x 3.39 inches [153 x 86 mm] |
| | **Max. Resolution** | 1024 x 600 |
| | **Max. Color** | 16.7 M |
| | **Luminance (cd/m²)** | 550 |
| | **View Angle (H°/V°)** | 170/170 |
| | **Contrast Ratio** | 800:1 |
| | **Backlight Lifetime (Hours)** | 30,000+ |
| **Touch Screen** | **Type** | 4-wire resistive touch |
| | **Active Area Accuracy** | Length (X) ±2%, width (Y) ±2% |
| **Electrical** | **Input Voltage** | 24 ± 20% VDC |
| | **Input Current** | 820mA @ 24 VDC |
| | **Input Power** | 19.7 W |
| | **Power Isolation** | Built-in |
| | **Isolation Resistance** | Exceed 50 MΩ at 500 VDC |
| **Mechanical** | **Enclosure** | Aluminum, charcoal grey |
| | **PCB Coating** | Yes |
| | **Dimensions (W x H x D)** | 7.89 x 5.77 x 1.42 inches [200.3 x 146.5 x 36 mm] |
| | **Net Weight** | Approx. 1.76 lbs. [0.8 kg] |
| | **Mounting** | Panel mounting |
| **Environmental** | **Operating Temperature** | -4° ~ 131°F [-20° ~ 55°C] |
| | **Storage Temperature** | -4° ~ 140°F [-20° ~ 60°C] |
| | **Relative Humidity** | 10% ~ 90% (non-condensing) |
| | **Altitude (Air Pressure)** | Below 3,000 meters (70.1 kPa) |
| | **Vibration Endurance** | 10 to 25 Hz (X, Y, Z direction, 2G, 30 minutes) |
| | **Rating** | UL Type 4X (indoor use only) NEMA 4, IP66 compliant front panel |
| | **Certifications** | cULus (Class I Div 2 rated), CE, RoHS |
| **Software** | EBPro (v6.07.01 or later), EasyAccess 2.0 (optional), CODESYS (optional), IIoT Ready, MQTT, Sparkplug B, VNC, CMTViewer, WebView, SQL | |
| **Notes** | *Only Tx and Rx may be used for COM1 RS-232 while COM3 RS-232 is in use.<br><br>CODESYS® is a trademark of CODESYS GmbH.<br>Specifications subject to change without notice | |



Top View

**Dimensions are in inches [mm]**

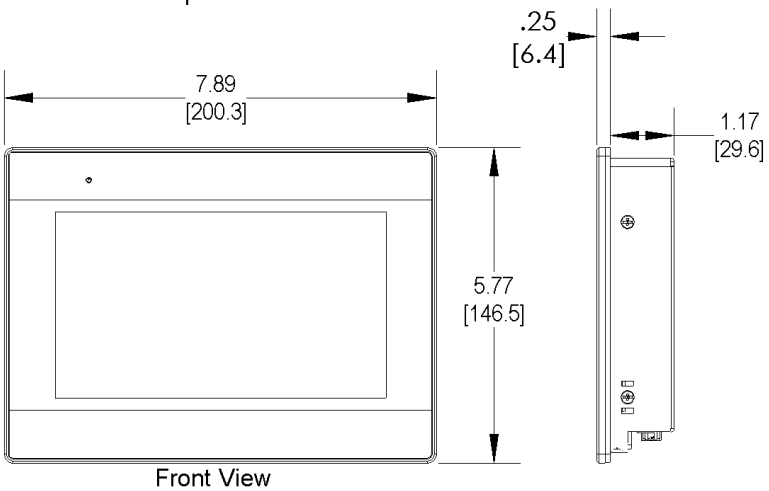


Front View

Side View

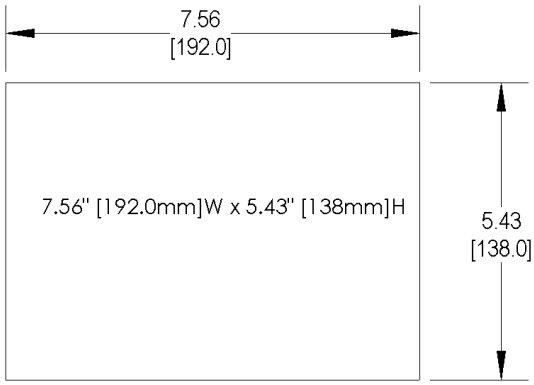


Cutout Dimensions

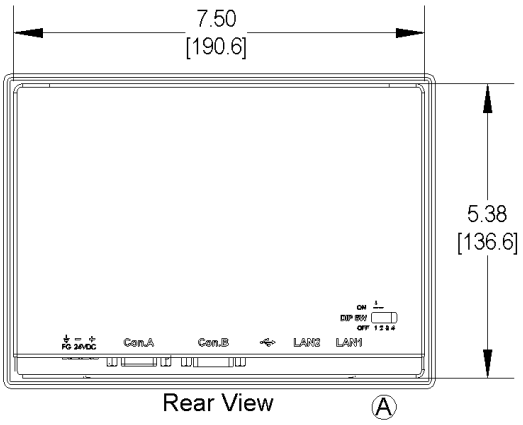


Rear View

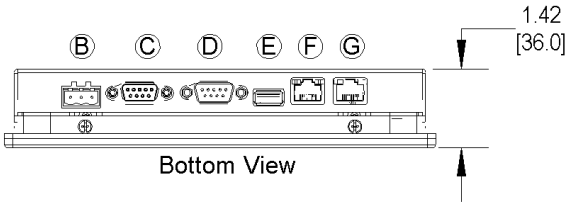


Bottom View

| | |
|---|---|
| A | DIP Switches |
| B | Power Connector |
| C | COM Port DE9S |
| D | COM Port DE9P |
| E | USB 2.0 Host Port |
| F | Ethernet Port |
| G | Ethernet Port |

# Why Buy A Maple HMI

In addition to our powerful and affordable hardware, we'll also continue to support your company long after a sale. Wide product selection, large in-stock inventory, outstanding product warranty, free technical support and software, and in-house repairs with quick turnaround times, Maple Systems has your business covered.




## Add Remote IO for PLC Functionality

Select Maple Advanced and High-Performance HMIs have a sleek hardware platform that runs both an HMI application created with our free HMI software and PLC logic programmed with CODESYS; each on its own dedicated processor. Unlike the typical multicore set up, where the operating system scheduler is responsible for allocating tasks to each processor, these HMIs have a hard separation between cores. One core is dedicated to the HMI application, the other to executing PLC logic of the CODESYS project. This ensures taxing graphics processing operations will not interfere with deterministic real time control tasks executing on the other processor.

After selecting your HMI, choose from a suite of easy to use powerful I/O modules to connect to your field equipment. We offer a complete set of I/O modules which can be combined with one of our communication couplers to create a remote I/O block.

## Remote Access and the IIoT

Remote access is the ability to access an HMI or connected device, from another device, at any time, and from anywhere. With our free HMI software and supported hardware solutions, you have the freedom to access the HMI, and all its data and applications, from another device and control it as if you were standing in front of it. The enhanced features in our High-Performance HMIs support SQL Database Servers, Web Browser, OPC UA Server, and FTP, in addition to cMT Viewer, WebView, Web Streaming, and EasyAccess 2.0 and are designed to make accessing your HMI and data fast and streamlined.

Our High-Performance HMIs can act as an access point enabling operating equipment on the plant floor to connect to information technologies of the Industrial Internet of Things (IIoT). With our IIoT solutions, that are already included in the EBPro software, we can help you achieve better access to invaluable data and open a world of possibilities for your business. Read more about our IIoT solutions.

## Build your SCADA

We offer all the components you need to create your own unique level of supervisory data acquisition and control, from the simplest stand-alone machine to sophisticated multi-device networked production line(s), all the way to enterprise-level operations and IIoT functionalities leveraging cloud connectivity.

Our products can help you standardize communications between devices, gluing different systems together for one source to your SCADA. No need to redesign your entire application. Keep the components that are already working for you, just add Maple Systems components to grow your abilities to supervise, control, and acquire data.

## Incredible Functionality Out of the Box

- Easily and quickly create the project with functional objects including numeric object, lamp object, combo-button, alarms, and recipes
- Pick and place objects, pictures, and shapes
- Import/export recipes
- Create trend display, graphs, XY plots, and pie charts
- Add passwords and security levels
- Assign communication (PLC) drivers easily and more with our Free HMI software

Additionally our HMIs support remote access solutions with VNC, MQTT, and OPC UA. For additional features see our High-Performance HMI series.



## User Friendly HMI Configuration Software

Because designing the layout of screens and user-interface (UI) of the HMI is typically where most of the development time is spent, we've made our Free HMI configuration software easy to use.

- Import tags feature
- Tools to diagnose and monitor PLC to HMI connection
- Debugging tools
- Pre-built libraries
- Off-line and on-line simulation

These are just a few of the ways our software makes creating your project easier. We also have controller information sheets, cable drawings, sample projects, Getting Started Guides, and videos/tutorials available in our support center 24/7.




Allen-Bradley ABB babcock BALDOR Danfoss SIEMENS MITSUBISHI Parker TOSHIBA YASKAWA Koyo Matsushita

## Programmable Logic Controller (PLC) Connectivity

With over 300 PLC & Controller communication protocols, these HMIs will easily integrate with your preferred PLC brands, including:

Allen-Bradley
Siemens
Omron
Emerson
GE
Panasonic
Mitsubishi
...and many more

Maple Systems, Inc. | 808 134th St SW, suite 120, Everett, WA 98204 | 425.745.3229 | maplesystems.com

# Panel Mount HMI Feature Overview

| With few exceptions, all our Standard HMIs support (this covers all the HMI prefix models, ex: HMI5043L/LB, HMI5070L/LB): | With few exceptions, all our Advanced HMIs support (this covers all the cMT2xxx series): | With few exceptions, all our High Performance HMIs support (this covers all the cMT3xxx series HMIs): |
|---|---|---|
| Alarm & Event Messages | Alarm & Event Messages | Alarm & Event Messages |
| Animation - Flow Block | Animation - Flow Block | Animation - Flow Block |
| ASCII Characters | ASCII Characters | ASCII Characters |
| Bar Graphs | Bar Graphs | Bar Graphs |
| Combo Button | Combo Button | Combo Button |
| Data Logging and Sampling | Data Logging and Sampling | Data Logging and Sampling |
| Date / Time | Date / Time | Date / Time |
| Dynamic Drawing | Dynamic Drawing | Dynamic Drawing |
| Dynamic Scale | Dynamic Scale | Dynamic Scale |
| EasyAccess 2.0 | EasyAccess 2.0 | EasyAccess 2.0 |
| EasyWatch | EasyWatch | EasyWatch |
| Enhanced Security Mode | Enhanced Security Mode | Enhanced Security Mode |
| Event Alarm Log | Event Alarm Log | Event Alarm Log |
| File Browser | File Browser | File Browser |
| Grid Display | Grid Display | Grid Display |
| Languages (Up to 24 ) | Languages (Up to 24 ) | Languages (Up to 24 ) |
| Libraries | Libraries | Libraries |
| Macros | Macros | Macros |
| Meters & Gauges | Meters & Gauges | Meters & Gauges |
| Modbus | Modbus | Modbus |
| Objects (Grouping, Layering, Aligning, Flip) | Objects (Grouping, Layering, Aligning, Flip) | Objects (Grouping, Layering, Aligning, Flip) |
| Off-line / On-line Simulation | Off-line / On-line Simulation | Off-line / On-line Simulation |
| OPC UA Client | OPC UA Client | OPC UA Client |
| Operation Log | Operation Log | Operation Log |
| Pass-Through Mode | Pass-Through Mode | Pass-Through Mode |
| Picture Object | Picture Object | Picture Object |
| Picture Viewer | Picture Viewer | Picture Viewer |
| Pie Chart | Pie Chart | Pie Chart |
| PLC Tag Embedded in Project | PLC Tag Embedded in Project | PLC Tag Embedded in Project |
| Project Password | Project Password | Project Password |
| Recipes | Recipes | Recipes |
| Remote Access | Remote Access | Remote Access |
| Scheduler | Scheduler | Scheduler |
| Security Levels (Enhanced) | Security Levels (Enhanced) | Security Levels (Enhanced) |
| System Setting Editor | System Setting Editor | System Setting Editor |
| Table | Table | Table |
| Text Object | Text Object | Text Object |
| Timer Object | Timer Object | Timer Object |
| Trend Display (Graphs) | Trend Display (Graphs) | Trend Display (Graphs) |
| User-Defined Start-Up Screen | User-Defined Start-Up Screen | User-Defined Start-Up Screen |
| Utility Manager | Utility Manager | Utility Manager |
| VNC Server | VNC Server | VNC Server |
| XY Plot | XY Plot | XY Plot |
| Email (1) | Email | Email |
| Macro Windows Open / Cycle / Close (1) | Macro Windows Open / Cycle / Close | Macro Windows Open / Cycle / Close |
| MQTT (1) | MQTT | MQTT |
| String Table (1) | String Table | String Table |
| Time Synchronization (1) | Time Synchronization | Time Synchronization |
| USB Tethering | USB Tethering | USB Tethering |
| VNC Viewer (1) | VNC Viewer | VNC Viewer |
| | IP Camera | IP Camera |
| | USB Camera | USB Camera |
| | Animation (Objects, Word Lamp, GIFs, Moving Shape) | Animation (Objects, Word Lamp, GIFs, Moving Shape) |
| | BACnet | BACnet |
| | CANbus | CANbus |
| | cMT Diagnoser | cMT Diagnoser |
| | cMT Viewer Support | cMT Viewer Support |
| | CODESYS (2) | CODESYS |
| | Media Player | Media Player |
| | MQTT - Advanced JSON | MQTT - Advanced JSON |
| | MQTT - AWS IoT, Sparkplug B, Azure IoT Hub | MQTT - AWS IoT, Sparkplug B, Azure IoT Hub |
| | PDF Reader | PDF Reader |
| | Web Streaming | Web Streaming |
| | WebView | WebView |
| | | Barcode Scanner (Android Camera) |
| | | Database Server |
| | | File Transfer Protocol (FTP) |
| | | OPC UA Server |
| | | PLC Web Browser |
| | | SQL Database Server Integration |

This table is for illustration only and subject to change. Always check the software to see if a feature is supported in your specific hardware.

(1) Not supported in the B Series (HMI5040B, 5070B, 5100B)

(2) Not supported on the cMT2166X