25T/H – INCREMENTAL ENCODER



Ø2.5"

FEATURES

- 2.5" Opto-ASIC Encoder with a Low Profile (2.0")
- Standard Bore Sizes Ranging from 0.625" to 1.125"
- Metric Bore Sizes Ranging from 6 mm to 28 mm
- Single Replacement Solution for 2.0" to 3.5" Encoders
- Resolutions to 10,000 CPR; Frequencies to 1 MHz
- Versatile Flexible Mounting Options
- RoHS Compliant

Representing the next generation of high performance encoders, the 25T Accu-Coder® features the largest thru-bore available in a 2.5" encoder, able to mount directly on shafts as large as 1.125" (28 mm). With resolutions up to 10,000 CPR and frequencies up to 1MHz, this industrial strength encoder is perfect for fast revving motors. The 25T features the next generation of EPC's proprietary Opto-ASIC sensor, which provides superior accuracy and precision counts. The injection molded housing, made from EPC's custom blend of nylon composites, is grooved with "cooling fins" and can tolerate the extreme heat of the motion-control industry. With sealing available up to IP66 and many new rugged flexible mounting options, the 25T can perform in demanding industrial environments.

COMMON APPLICATIONS

Motor-Mounted Feedback and Vector Control, Specialty Machines, Robotics, Web Process Control, Paper and Printing, High Power Motors

25T/H ORDERING GUIDE

Blue type indicates price adder options. Not all configuration combinations may be available. Contact Customer Service for details.

Mechanical | **Electrical** | **Optional Features** (Leave Blank for Standard Options)

25T		–	42	SE	–	0500	N	V1	R	OC	–	SMW	–	-20° to 85° C Std	IP50 Std	None Std

MODEL
25T Thru-Bore
25H Hollow Bore (Blind)

HOUSING OPTION (Leave Blank for Standard)
Standard
C Corrosion Resistant

BORE SIZE[1]

01	1/4", 0.250"	**04**	6 mm
03	5/16", 0.3125"	**14**	8 mm
		10	10 mm
02	3/8", 0.375"	**09**	11 mm
05	1/2", 0.500"	**12**	12 mm
11	5/8", 0.625"	**13**	14 mm
34	3/4", 0.750"	**15**	15 mm
78	7/8", 0.875"	**16**	16 mm
40	1", 1.000"	**17**	17 mm
42	1-1/8", 1.125"	**18**	18 mm
		19	19 mm
		20	20 mm
		24	24 mm
		25	25 mm
		28	28 mm

MOUNTING
SE 2.25" to 2.75" B.C. 3-point Flex Mount
SG 3.50" to 5.90" B.C. (4.5" C-face) Tether Arm Kit
SJ 3.50" to 8.10" B.C. (8.5" C-face) Tether Arm Kit
SH 2.72" to 3.42" B.C. (Block & Pin) Tether Arm Kit

CYCLES PER REVOLUTION
See *CPR Options* below
Price Adder for Resolutions Over 2000

INPUT VOLTAGE
V1 5 to 28 VDC

NUMBER OF CHANNELS[1]
Channel A Leads B
Q Quadrature A & B
R Quadrature A & B with Index
Channel B Leads A[2]
K Reverse Quadrature A & B
D Reverse Quadrature A & B with Index

See http://www.encoder.com/literature/index-phasing.pdf for additional options and waveforms.

OUTPUT TYPE
5 - 28V In/Out[3]
OC Open Collector
PP Push-Pull
HV Line Driver[4]
PU Pull-Up Resistor[5]
8- 28V In/5V Out[6]
H5 Line Driver[4]
P5 Push-Pull

CONNECTOR TYPE[7]
SMW 6-pin MS[4,8]
SMY 7-pin MS[4]
SMX 10-pin MS
SMJ 5-pin M12[4]
SMK 8-pin M12 Standard Wiring
SMZ 8-pin M12 Optional Wiring
SMH 10-pin Bayonet[9]
F00 Gland, 24" Cable[10]
9D 9-pin D-Sub[9]
TBX 10-pin Terminal Block[13]

OPERATING TEMPERATURE
-20° to 85° C (Std)
T1 -40° to 85° C
T4 -20° to 105° C[11]

SEALING
IP50 (Standard)
S3 IP66

CERTIFICATION
None (Std)
CE CE Marked[12]

25T/H CPR OPTIONS

0001	0002	0003	0005	0008	0010	0011	0012
0024	0025	0030	0032	0050	0060	0064	0070
0080	0100	0105	0115	0120	0125	0150	0180
0192	0200	0240	0250	0256	0300	0336	0360
0500	0512	0600	0625	1000	1024	1200	1250
1800	2000	2048	2400	2500	3600	4096	5000
7200	8192	10,000					

Contact Customer Service for other disk resolutions.

NOTES:
1. Contact Customer Service for additional options.
2. Reverse Quadrature not available with PU output type.
3. 24 VDC max for T4 temperature option.
4. Line Driver not available with 5-pin M12 or 6-pin MS style connectors. Available with 7-pin MS style connector without index Z.
5. With Input Voltage above 16 VDC, operating temperature is limited to 85° C max.
6. Standard operating temperature only.
7. For mating connectors, cables, and cordsets see Accessories at encoder.com. For Connector Pin Configuration Diagrams, see Technical Information or see Connector Pin Configuration Diagrams at encoder.com.
8. Not available with CE option.
9. Not available with corrosion resistant option.
10. For non-standard English cable lengths, enter 'F' plus cable length expressed in feet. Example: F06 = 6 feet of cable.
11. Contact Customer Service for availability on resolutions < 360 CPR.
12. Please refer to Technical Bulletin TB100: When to Choose the CE Mark at encoder.com. Contact Customer Service for availability.
13. 10-pin Terminal Block not available with S3 Sealing or C Corrosion Resistance.

1-800-366-5412 | encoder.com | sales@encoder.com
© 2026 Encoder Products Company, REV 1.3 - 07/06/2026

25T/H – INCREMENTAL ENCODER

25T/H SPECIFICATIONS

Electrical

Input Voltage	4.75 to 28 VDC max for temperatures up to 85° C 4.75 to 24 VDC max for temperatures between 85° and 105° C
Input Current	100 mA max with no output load
Output Format	Incremental – Two square waves in quadrature with channel A leading B for clockwise shaft rotation, as viewed from the mounting face. See Waveform Diagram, below.
Output Types	**Open Collector** – 20 mA max per channel **Pull Up** – Open Collector with 2.2K ohm internal resistor, 20 mA max per channel **Push-Pull** – 20 mA max per channel **Line Driver** – 20 mA max per channel (Meets RS 422 at 5 VDC supply)
Index	Once per revolution. 1 to 360 CPR: Ungated 361 to 10,000 CPR: Gated to output A See Waveform Diagram, below.
Max. Frequency	250 kHz for 1 to 2500 CPR 500 kHz for 2501 to 5000 CPR 1 MHz for 5001 to 10,000 CPR
CE Testing	Emissions tested per EN61000-6-3:2001 as applicable. Immunity tested per EN6100-6-2: 2005 as applicable.
Min. Edge Sep	45° electrical min, 63° electrical or better typical
Rise Time	Less than 1 microsecond
Accuracy	Within 0.1° mechanical from one cycle to any other cycle, or 6 arc minutes.

Mechanical

Max Shaft Speed	6000 RPM, 8000 RPM intermittent 4000 RPM for IP66 seal option
Bore Tolerance	-0.0000"/+0.0008"
User Shaft Tolerances	Radial Runout ..... 0.005" max Axial Endplay ..... ±0.050" max
Starting Torque	IP50 sealing: 1.0 oz-in typical IP66 sealing: 4.0 oz-in typical Note: Add 1.0 oz-in typical for -20° C operation
Moment of Inertia	7.6 x 10^{-4} oz-in-sec^2
Housing	Proprietary nylon composite
Weight	8 oz typical

Environmental

Storage Temp	-20° to 85° C
Humidity	98% RH non-condensing
Vibration	20 g @ 5 to 2000 Hz
Shock	80 g @ 11 ms duration
Sealing	IP50, IP66 with shaft seals at both ends

WIRING TABLE

For EPC-supplied mating cables, refer to wiring table provided with cable.Trim back and insulate unused wires.
Note: Color chart is for Gland Cables only.

Function	5-pin M12*	8-pin M12* Standard Wiring	8-pin M12* Optional Wiring	10-pin MS	7-pin MS HV, H5	7-pin MS PU, PP, OC, P5	6-pin MS PU, PP, OC, P5	9-pin D-sub	10-pin Bayonet HV, H5, OD, PU, PP, OC, P5	10-pin Terminal Block	Gland Cable** Wire Color
Com	3	7	1	F	F	F	A, F	9	F	3	Black
+VDC	1	2	2	D	D	D	B	1	D	1	White
A	4	1	3	A	A	A	D	2	A	4	Brown
A'	–	3	4	H	C	–	–	3	H	5	Yellow
B	2	4	5	B	B	B	E	4	B	6	Red
B'	–	5	6	I	E	–	–	5	J	7	Green
Z	5	6	7	C	–	C	C	6	C	8	Orange
Z'	–	8	8	J	–	–	–	7	K	9	Blue
Case	–	–	–	G	G	G	–	8	G	10	–
Shield	–	–	–	–	–	–	–	–	–	–	Bare***

* CE Option: Use cable cord set with shield connected to M12 connector coupling nut.
** Standard cable is 24 AWG conductors with foil and braid shield.
*** CE Option: Cable shield (bare wire) is connected to internal case.

WAVEFORM DIAGRAM

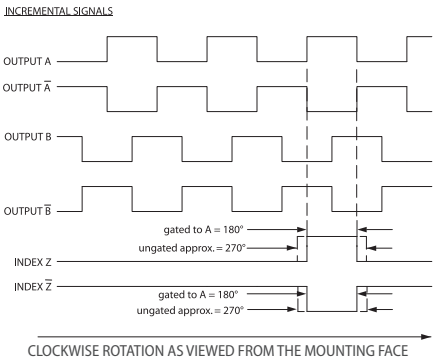

NOTE: ALL DEGREE REFERENCES ARE ELECTRICAL DEGREES. WAVEFORM SHOWN WITH OPTIONAL COMPLEMENTARY SIGNALS A, B, Z FOR HV AND H5 OUTPUTS ONLY.

Accu-CoderPro® is a registered trademark of Encoder Products Company

1-800-366-5412 | encoder.com | sales@encoder.com
© 2026 Encoder Products Company, REV 1.3 - 07/06/2026

25T/H – INCREMENTAL ENCODER

25T/H 3-POINT FLEX MOUNT (SE)

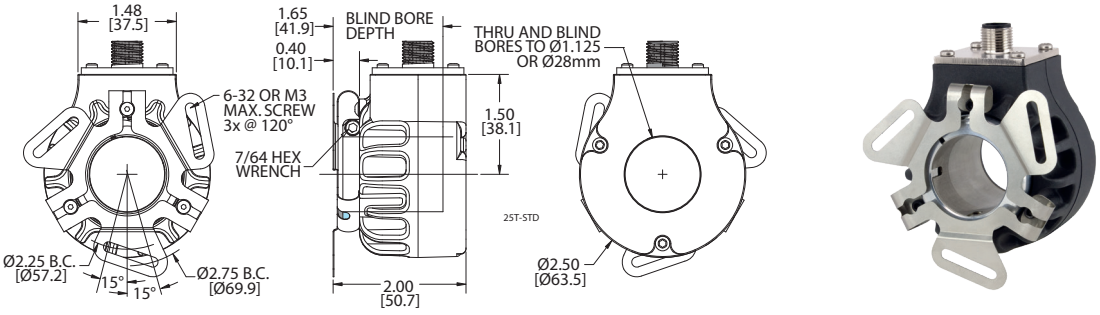

25T/H CONNECTOR OPTIONS

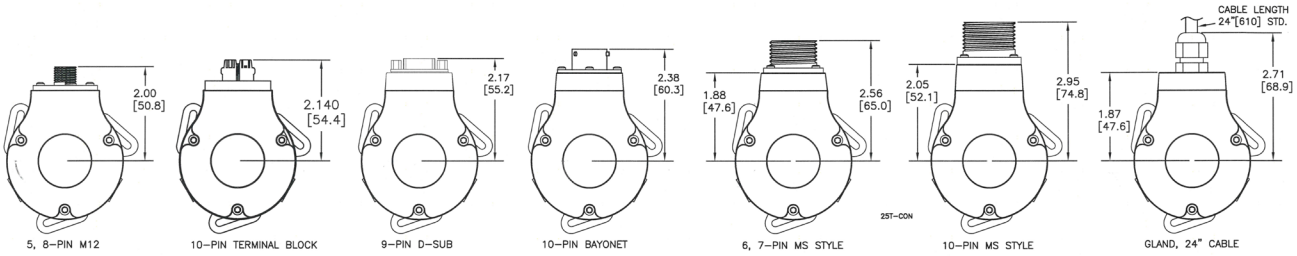

25T/H MOUNTING OPTIONS

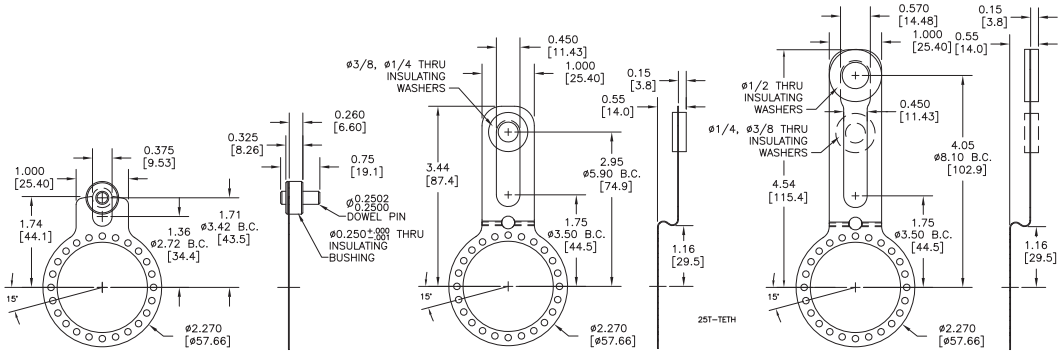

All dimensions are in inches with a tolerance of ±0.005" or ±0.01" unless otherwise specified.

1-800-366-5412 | encoder.com | sales@encoder.com
© 2026 Encoder Products Company, REV 1.3 - 07/06/2026